C B T E S T R E P O R T

12311761 001

for

MFP (Multi Function Printer)
TASKalfa 1800, TASKalfa 2200,
TASKalfa 1801, TASKalfa 2201

KYOCERA Document Solutions Inc.

This documentation consists of **140** pages (excluding this cover page).

Test Report issued under the responsibility of:

TÜVRheinland®

TEST REPORT

IEC 60950-1
Information technology equipment – Safety – Part 1: General requirements

Report Number. .....:	12311761 001
Date of issue .....:	2013-03-26
Total number of pages	140
CB Testing Laboratory.....:	TÜV Rheinland Japan Ltd. Osaka Laboratory
Address .....:	Wakasugi Center Bldg., Honkan 16F, 2-9-1 Higashi Tenma, Kita-ku, 530-0044 Osaka, JAPAN
Applicant's name.....:	KYOCERA Document Solutions Inc.
Address .....:	1-2-28, Tamatsukuri, Chuo-ku, Osaka-shi, Osaka, 540-8585 Japan
Manufacturer's name……..:	(same as Applicant)
Address .....:	(same as Applicant)
Test specification:	
Standard .....:	IEC 60950-1:2005 (Second Edition) + Am 1:2009
Test procedure .....:	CB Scheme
Non-standard test method……..:	N/A
Test Report Form No.....:	IEC60950_1C
Test Report Form(s) Originator .....:	SGS Fimko Ltd
Master TRF.....:	Dated 2012-08

Copyright © 2012 Worldwide System for Conformity Testing and Certification of Electrotechnical Equipment and Components (IECEE), Geneva, Switzerland. All rights reserved.

This publication may be reproduced in whole or in part for non-commercial purposes as long as the IECEE is acknowledged as copyright owner and source of the material. IECEE takes no responsibility for and will not assume liability for damages resulting from the reader's interpretation of the reproduced material due to its placement and context.

If this Test Report Form is used by non-IECEE members, the IECEE/IEC logo and the reference to the CB Scheme procedure shall be removed.

This report is not valid as a CB Test Report unless signed by an approved CB Testing Laboratory and appended to a CB Test Certificate issued by an NCB in accordance with IECEE 02.

IEC 60950-1

Test item description..... :	MFP (Multi Function Printer)
Trade Mark ..... :	KYOCERA (on the products)
Manufacturer..... :	(Same as Applicant)
Model/Type reference..... :	TASKalfa 1800, TASKalfa 2200, TASKalfa 1801, TASKalfa 2201
Ratings..... :	AC 220-240V, 50/60Hz, 6.3A

IEC 60950-1

Testing procedure and testing location:			
☒	**CB Testing Laboratory**:	TÜV Rheinland Japan Ltd., Osaka Laboratory	
Testing location/ address .....:		Wakasugi Center Bldg., Honkan 16F, 2-9-1 Higashi Tenma, Kita-ku, 530-0044 Osaka, JAPAN	
☐	**Associated CB Laboratory:**		
Testing location/ address .....:			
	Tested by (name + signature)..... :	S. Hamamoto	
	Approved by (name + signature) ..... :	T. Izumi	
☒	Testing procedure: **TMP**		
Testing location/ address .....:		KYOCERA Document Solutions Inc. 1-2-28, Tamatsukuri, Chuo-ku, Osaka-shi, Osaka, 540-8585 Japan	
	Tested by (name + signature)..... :	S. Hamamoto	
	Approved by (name + signature) ..... :	T. Izumi	
☐	Testing procedure: **WMT**		
Testing location/ address .....:			
	Tested by (name + signature)..... :		
	Approved by (name + signature) ..... :		
☐	Testing procedure: **SMT**		
Testing location/ address .....:			
	Tested by (name + signature)..... :		
	Approved by (name + signature) ..... :		
☐	Testing procedure: **RMT**		
Testing location/ address .....:			
	Tested by (name + signature)..... :		
	Approved by (name + signature) ..... :		

IEC 60950-1

Summary of testing:

Serial No.: Production sample with serial number: Z053200018

If not stated otherwise, tests were conducted on the model TASKalfa 2201 including optional accessories described in "Options" to represent the other similar models.

(see General product information)

Fax System (X) is already evaluated at TÜV CBTR 12311222 001.

Tests performed (name of test and test clause):	**Testing location:**
(see below)	CB Testing Laboratory, for cl. 4.3.13.5 TMP for others. (see "Testing procedure and testing location" on the previous page)

Testing		Applicable (Yes/No)	Comments
Clause	Test description		
1.6.2	Input current	Yes	
1.7.11	Durability	Yes	
2.1.1.5	Energy hazards	Yes	
2.1.1.7	Discharge of capacitors in equipment	Yes	
2.1.1.8	Energy hazards – d.c. mains supply	No	
2.2.2	SELV/Voltage measurement under normal condition	Yes	
2.2.3	SELV/Voltage measurement under fault conditions	Yes	
2.3.5	Operating voltages generated externally	No	
2.4.2	Limited current circuits	Yes	
2.5	Limited power sources	Yes	
2.6.3.4	Resistance of earthing conductors and their terminations	Yes	
2.9.2	Humidity conditioning	Yes	
2.10	Creepage and Clearances, Distance through Insulation	Yes	
2.10.2.2/ 2.10.2.3	Determination of working voltage	Yes	
2.10.5	Solid insulation	Yes	
2.10.12	Enclosed and sealed parts	No	
3.2.6	Cord anchorages and strain relief	No	

IEC 60950-1

Testing		Applicable (Yes/No)	Comments
Clause	Test description		
4.1	Stability	Yes	
4.2	Mechanical strength	Yes	
4.3.6	Direct plug-in equipment	No	
4.3.13	Radiation	Yes	
4.5.2	Maximum Temperatures	Yes	
4.5.5	Resistance to abnormal heat	Yes	
5.1	Touch current and protective conductor current	Yes	
5.2	Electric strength	Yes	
5.3	Abnormal operating and fault conditions	Yes	
6.1.2	Separation of the telecommunication network from earth	Yes	
6.2	Protection of equipment users from overvoltages on telecom. Networks	Yes	Test in the original CB report (TÜV CBTR 12311222 001).
6.3	Protection of the telecommunication wiring system from overheating	No	
7.2	Protection of equipment users from overvoltages on cable distribution system	No	
7.3	Insulation between primary and cable distribution system	No	
Annex A	Resistance to heat and fire	No	
Annex B	Locked-rotor overload test	Yes	
Annex C	Overload test	Yes	
Annex G	Determining minimum clearances	No	
Annex H	Ionizing radiation	No	
Annex K	Thermal controls	No	
Annex M	Criteria for telephone ringing signals	No	
Annex Q	Voltage dependent resistors (VDRs)	No	
Annex U	Insulated wire for use without interleaved insulation	No	
Annex Y	Ultraviolet light conditioning test	No	

IEC 60950-1

Testing		Applicable (Yes/No)	Comments
Clause	Test description		
Annex CC	Evaluation of Integrated circuit (IC) current limiters	No	
Annex DD	Requirements for the mounting means of rack-mounted equipment	No	
Annex EE	Household and home/office document/media shredders	No	

Additionally evaluated Test specifications (see appended test report).

EN 60950-1:2006 + A11:2009 + A1:2010 + A12: 2011

IEC 60825-1:2007
EN 60825-1:2007

Summary of compliance with National Differences

EU Group Differences, EU Special National Conditions, EU A-Deviations,
DK, FI, DE, KR, SI, SE, GB.

Explanation of used codes: CA=Canada, DK=Denmark, FI=Finland, DE=Germany, IL= Israel, KR=Republic of Korea, SI=Slovenia, SE=Sweden, GB=United Kingdom, US=United States of America.

For National Differences see end of this test report.

IEC 60950-1

Copy of marking plate: The artwork below may be only a draft. The use of certification marks on a product must be authorized by the respective NCBs that own these marks.

IEC 60950-1

Copy of marking plate: The artwork below may be only a draft. The use of certification marks on a product must be authorized by the respective NCBs that own these marks.

IEC 60950-1

Copy of marking plate: The artwork below may be only a draft. The use of certification marks on a product must be authorized by the respective NCBs that own these marks.

Laser Unit

Cassette Heater

Fixing Unit

IEC 60950-1

Test item particulars .....:	
Equipment mobility .....:	[] movable [] hand-held [] transportable [X] stationary [] for building-in [] direct plug-in
Connection to the mains .....:	[X] pluggable equipment [X] type A [] type B [] permanent connection [X] detachable power supply cord [] non-detachable power supply cord [] not directly connected to the mains
Operating condition.....:	[X] continuous [] rated operating / resting time:
Access location .....:	[X] operator accessible [] restricted access location
Over voltage category (OVC) .....:	[] OVC I [X] OVC II [] OVC III [] OVC IV [] other:
Mains supply tolerance (%) or absolute mains supply values .....:	-10%, +10%
Tested for IT power systems .....:	[X] Yes [] No
IT testing, phase-phase voltage (V) .....:	230V
Class of equipment .....:	[X] Class I [] Class II [] Class III [] Not classified
Considered current rating of protective device as part of the building installlation (A) .....:	16A (for Europe)
Pollution degree (PD) .....:	[] PD 1 [X] PD 2 [] PD 3
IP protection class .....:	Not rated, indoor use only
Altitude during operation (m) .....:	Up to 3500
Altitude of test laboratory (m) .....:	< 1000
Mass of equipment (kg) .....:	Approx. 25kg (without options)
Possible test case verdicts:	
- test case does not apply to the test object ..... :	N/A (or N)
- test object does meet the requirement ..... :	P (Pass)
- test object does not meet the requirement ..... :	F (Fail)

IEC 60950-1

Testing..... :	
Date of receipt of test item..... :	2012-02-13 for cl. 6.2.2.1 2013-03-12 for laser test N/A (TMP)
Date(s) of performance of tests..... :	2012-02-14 to 2012-02-23 for cl. 6.2.2.1, 2013-03-12 for laser test 2013-03-10 to 2013-03-16 for TMP Refer to Summary of testing

General remarks:

The test results presented in this report relate only to the object tested.
This report shall not be reproduced, except in full, without the written approval of the Issuing testing laboratory.
"(see Enclosure #)" refers to additional information appended to the report.
"(see appended table)" refers to a table appended to the report.

Throughout this report a ☐ comma / ☒ point is used as the decimal separator.

IEC 60950-1

Manufacturer's Declaration per sub-clause 6.2.5 of IECEE 02:

The application for obtaining a CB Test Certificate includes more than one factory location and a declaration from the Manufacturer stating that the sample(s) submitted for evaluation is (are) representative of the products from each factory has been provided ..... :

☒ Yes
☐ Not applicable

When differences exist; they shall be identified in the General product information section.

Name and address of factory (ies) ..... :

1. KYOCERA Document Technology (Dongguan) Co., Ltd.

   Kyocera Industrial Park
   3 Fangzheng East Rd
   Shilong, Dongguan, Guangdong, P.R. China

2. YiHe PLASTIC & ELECTRONIC PRODUCTS (SHENZHEN) CO., LTD

   EVA Industrial Garden
   Tang Xing Road, Shi Yan Town
   Bao An District, Shenzhen 518108, P.R. China

3. Tenma Precision (ShenZhen) Co., Ltd.

   No. 1301-19 Guanguang Road
   Dabuxiang Community, Guanlan Sub-district,
   Bao' an District, Shenzhen, Guangdong Province
   518110, P.R. China

IEC 60950-1

1) Application details / Description of the product:

The product tested is a multi functional machine including black/white copier, printer, scanner, and facsimile for use in a general office environment.

Max. specified ambient temperature (°C) ..... 32.5°C

Supply connection..... Appliance inlet and detachable power cord set.

Laser classification..... Class 1

A non-approved building-in type switching power supply was tested as part of the overall configuration of the equipment. SWPS 1H645H of Sanken Electric Co., Ltd. (see appended table 1.5.1 for details)

There are optional dehumidifying heaters (primary) in the main unit, the optional Cassette Feeding Unit, model PF-480.

2) Differences between the models:

The models of main units are essentially the same except for main items described in the following table and in the margin.

Different items	TASKalfa 1800	TASKalfa 2200	TASKalfa 1801	TASKalfa 2201
Speed (A4 sheet/min)	18	22	18	22
Fax System (X) (Option)	Not provide		Provide	
Printer NIC (Option)	Not provide		Provide	

3) Options:

The following optional accessories were considered during relevant tests.

- Cassette Feeding Unit, model PF-480 supplied by AC 220-240V 50/60Hz, DC 5V, and DC 24V
- Document Feeder, model DP-480 supplied by DC 5V and DC 24V
- Fax Kit, model Fax System (X) - TNV, supplied by SELV

See appended table 1.5.1 and relevant subclauses for details.

IEC 60950-1

4) Insulation system:

- Secondary circuits are separated from primary by double/reinforced insulation.
- Primary circuits are separated from earth by at least basic insulation.
- All output / interface voltages are at SELV level.
- Secondary circuits are conductively connected to earth.
- High voltage is generated from SELV circuits, see cl. 2.2.4.
- Metal chassis and relevant accessible metal parts are reliably connected to protective bonding.
- TNV circuits are separated from primary by double/reinforced insulation.
- TNV circuits are separated from secondary circuits by basic insulation.

4.1) Sub-units (PCB's, ...)

With pri – sec separation .....: SWPS, Fixing Unit

With pri – parts only .....: (none)

HV-unit(s) .....: High Voltage PWB

4.2) Pri - sec components, which are not part of the above mentioned sub-units:

(none)

4.3) Non certified pri-components directly mounted to chassis:

(none)

IEC 60950-1

Attachments included in this Test Report:

- Measurement Section
- National Differences
- IEC/EN 60825-1 test report.

Attachments separated from this Test Report:

- Photo Documentation

Abbreviations used in the report:

- normal conditions	N.C.	- single fault conditions	S.F.C
- functional insulation	FI	- basic insulation	BI
- double insulation	DI	- supplementary insulation	SI
- between parts of opposite polarity	BOP	- reinforced insulation	RI
- protective earth/protective bonding	PE/PB	- primary	Pri
- (switching) power supply	(SW)PS	- secondary	sec
- high voltage	HV	- ground	gnd
- printed circuit (wiring) board	PCB	- input/output	I/O
- triple insulated wire	TIW	- installation instruction	ii
- built-in application	B/I		

IEC 60950-1			
Clause	Requirement + Test	Result - Remark	Verdict
1	**GENERAL**		P
1.5	**Components**		P
1.5.1	General		P
	Comply with IEC 60950-1 or relevant component standard	(see appended table 1.5.1)	P
1.5.2	Evaluation and testing of components	Components, which are certified for IEC and/or national standards, are used correctly within their ratings.	P
1.5.3	Thermal controls	Certified components used; correct application confirmed.	P
1.5.4	Transformers	(see Annex C)	P
1.5.5	Interconnecting cables	Interconnection cable for signal I/O is carrying SELV voltages.	P
1.5.6	Capacitors bridging insulation	Type X2 capacitors used between lines, type Y1 capacitors used between line and earth comply with IEC 60384-14.	P
1.5.7	Resistors bridging insulation	See below	P
1.5.7.1	Resistors bridging functional, basic or supplementary insulation	Only resistors bridging functional insulations.	P
1.5.7.2	Resistors bridging double or reinforced insulation between a.c. mains and other circuits	No such components.	N/A
1.5.7.3	Resistors bridging double or reinforced insulation between a.c. mains and antenna or coaxial cable	No such components.	N/A
1.5.8	Components in equipment for IT power systems	Line to PE components are rated for line to line voltage.	P
1.5.9	Surge suppressors	See below	P
1.5.9.1	General	VDR (NR151) used in primary between line and neutral.	P
1.5.9.2	Protection of VDRs	Protected by fuse in series. VDR (NR151) was mounted on PCB with min. V-1 and other components/materials (C151, C153, L151) within 13 mm from VDR were min. V-1 Class Material or approved components (see cl. 4.7.3.1).	P
1.5.9.3	Bridging of functional insulation by a VDR	VDR used between lines.	P

IEC 60950-1			
Clause	Requirement + Test	Result - Remark	Verdict
1.5.9.4	Bridging of basic insulation by a VDR	No such VDR	N/A
1.5.9.5	Bridging of supplementary, double or reinforced insulation by a VDR	Supplementary, double or reinforced insulation not bridged by VDR.	N/A
1.6	**Power interface**		P
1.6.1	AC power distribution systems	TN, TN-S, IT (considered for Norway)	P
1.6.2	Input current	(see appended table 1.6.2)	P
1.6.3	Voltage limit of hand-held equipment	Not hand-held equipment.	N/A
1.6.4	Neutral conductor	Neutral insulated from earth like a line conductor by at least basic insulation. Components between neutral and earth are rated the same as for line to earth.	P

IEC 60950-1			
Clause	Requirement + Test	Result - Remark	Verdict
1.7	**Marking and instructions**		P
1.7.1	Power rating and identification markings	See below.	P
1.7.1.1	Power rating marking		P
	Multiple mains supply connections.....:	Single mains supply connection.	N/A
	Rated voltage(s) or voltage range(s) (V).....:	AC 220 – 240V	P
	Symbol for nature of supply, for d.c. only.....:	AC supply.	N/A
	Rated frequency or rated frequency range (Hz) ....:	50/60Hz	P
	Rated current (mA or A) .....:	6.3A	P
1.7.1.2	Identification markings		P
	Manufacturer's name or trade-mark or identification mark .....:	KYOCERA (on the products)	P
	Model identification or type reference .....:	TASKalfa 1800, TASKalfa 2200, TASKalfa 1801, TASKalfa 2201	P
	Symbol for Class II equipment only .....:	Class I equipment	N/A
	Other markings and symbols .....:	(see copy of marking plate)	P
1.7.2	Safety instructions and marking	See below.	P
	Operating Instructions provided to the operator, containing necessary instructions and caution information. English and German version checked. At least the safety relevant information is given in German or other applicable languages. Correct translation of safety relevant information for Germany confirmed. (In the following, relevant information may be given in an equivalent wording.) <u>Noise declaration for Germany:</u> "Der höchste Schalldruckpegel beträgt 70 dB(A) oder weniger gemäß EN ISO 7779" <u>Non-toxic toner</u> used. Proper disposal instructions provided (service manual). "Caution hot"; high temperature warning on fuser unit, as it does not immediately cool down when accessed during paper jam removal. Dangerous levels of <u>ozone</u> not generated. Instruction for installation in a well-ventilated room is given. <u>Laser label and warning label</u> is provided: "CLASS 1 LASER PRODUCT" and other warning label. Refer to IEC 60825-1 report.		—

IEC 60950-1			
Clause	Requirement + Test	Result - Remark	Verdict
1.7.2.1	General		P
1.7.2.2	Disconnect devices	Appliance inlet used.	N/A
1.7.2.3	Overcurrent protective device	Pluggable equipment type A	N/A
1.7.2.4	IT power distribution systems	Considered for Norway. No special modification, no instruction required.	P
1.7.2.5	Operator access with a tool	In normal use, no tools are required to access operator area.	N/A
1.7.2.6	Ozone	See cl. 1.7.2.	P
1.7.3	Short duty cycles	Continuous operation.	N/A
1.7.4	Supply voltage adjustment .....:	Single voltage range.	N/A
	Methods and means of adjustment; reference to installation instructions .....:	--	—
1.7.5	Power outlets on the equipment .....:	No power outlets provided.	N/A
1.7.6	Fuse identification (marking, special fusing characteristics, cross-reference) .....:	Fuses on SWPS are clearly and adequately marked with fuse numbers and ratings. F101: T2AH 250V F102: T8A 250V F151: T6.3AH 250V “CAUTION-FOR CONTINUED PROTECTION AGAINST RISK OF FIRE, REPLACE ONLY WITH SAME TYPE AND RATINGS OF FUSES.” No user accessible fuse holder.	P
1.7.7	Wiring terminals	See below.	P
1.7.7.1	Protective earthing and bonding terminals .....:	Approved appliance inlet used. PB terminals, connecting to the chassis, are marked with symbol IEC 60417, No. 5017.	P
1.7.7.2	Terminals for a.c. mains supply conductors	Appliance inlet used.	N/A
1.7.7.3	Terminals for d.c. mains supply conductors	No connection to DC mains.	N/A
1.7.8	Controls and indicators	See below.	P

IEC 60950-1			
Clause	Requirement + Test	Result - Remark	Verdict
1.7.8.1	Identification, location and marking .....:	Safety related switches and controls: Power Switch: function is obvious by positioning and marking (see 1.7.8.3) Other indicators/controls provided for functional reasons, not affecting safety.	P
1.7.8.2	Colours .....:	--	N/A
1.7.8.3	Symbols according to IEC 60417 .....:	Marking for power switch according to IEC 60417, No. 5007 " I " , 5008 " O " and 5009 (5009 was only provided for Korea model) .	P
1.7.8.4	Markings using figures .....:	Not used.	N/A
1.7.9	Isolation of multiple power sources .....:	Single supply.	N/A
1.7.10	Thermostats and other regulating devices .....:	No such thermostats or the like.	N/A
1.7.11	Durability		P
1.7.12	Removable parts	Safety relevant markings are located on fixed installed parts.	P
1.7.13	Replaceable batteries .....:	Lithium battery not replaceable by user. Warning statement provided in service instructions.	P
	Language(s) .....:	English.	—
1.7.14	Equipment for restricted access locations.....:	Not intended for restricted access location.	N/A

IEC 60950-1			
Clause	Requirement + Test	Result - Remark	Verdict
2	**PROTECTION FROM HAZARDS**		P
2.1	Protection from electric shock and energy hazards		P
2.1.1	Protection in operator access areas		P
2.1.1.1	Access to energized parts	See below.	P
	Test by inspection .....:	Operator cannot contact any hazardous bare parts or parts with only basic insulation to hazardous voltage. No ELV circuits.	P
	Test with test finger (Figure 2A) .....:	No access to hazardous parts.	P
	Test with test pin (Figure 2B) .....:	The test pin cannot touch hazardous bare parts through any openings in the enclosure.	P
	Test with test probe (Figure 2C) .....:	Test probe cannot touch TNV circuits.	P
2.1.1.2	Battery compartments	No battery compartment.	N/A
2.1.1.3	Access to ELV wiring	No ELV circuits.	N/A
	Working voltage (Vpeak or Vrms); minimum distance through insulation (mm)		—
2.1.1.4	Access to hazardous voltage circuit wiring	Not accessible to operator.	P
2.1.1.5	Energy hazards .....:	No energy hazards in operator access area. (see appended table 2.1.1.5)	P
2.1.1.6	Manual controls	Not connected to and sufficiently separated from hazardous voltages.	P
2.1.1.7	Discharge of capacitors in equipment		P
	Measured voltage (V); time-constant (s) .....:	(see appended table 2.1.1.7)	—
2.1.1.8	Energy hazards – d.c. mains supply	No d.c. mains supply.	N/A
	a) Capacitor connected to the d.c. mains supply ..:	--	N/A
	b) Internal battery connected to the d.c. mains supply .....:	--	N/A
2.1.1.9	Audio amplifiers .....:	Not provided.	N/A

IEC 60950-1			
Clause	Requirement + Test	Result - Remark	Verdict
2.1.2	Protection in service access areas	Bare parts carrying hazardous voltage or energy levels are located or guarded properly to avoid unintentional contact and bridging. No unexpected hazard. TNV circuits are sufficiently protected against bridging and/or accidental contact.	P
2.1.3	Protection in restricted access locations	Not intended to be installed in a restricted access location.	N/A
2.2	**SELV circuits**		P
2.2.1	General requirements		P
2.2.2	Voltages under normal conditions (V) .....:	Rated output of SWPS, max. 29.2V dc, considered.	P
2.2.3	Voltages under fault conditions (V) .....:	Measured 28.0V max. Limits of 71V peak and 120Vdc were not exceed, SELV limits not for longer than 0.2 seconds. (see appended table 5.3)	P
2.2.4	Connection of SELV circuits to other circuits .....:	SELV not connected to primary. HV circuits complied with limited current circuits except for outputs B and M of MPH7486. When those outputs were shorted to SELV side, SELV was not exceeded at the output connections of the circuits. Outputs of switching transformers were shorted to SELV sides, output voltages of SWPSs were not exceeded SELV limits. (measured with oscilloscope) (see appended table 2.2.3)	P

IEC 60950-1			
Clause	Requirement + Test	Result - Remark	Verdict
2.3	**TNV circuits**		P
2.3.1	Limits	Continuous voltages, combination of AC and DC values, are such that : $\frac{U_{ac}}{71} + \frac{U_{dc}}{120} \leq 1$	P
	Type of TNV circuits .....:	TNV-3	—
2.3.2	Separation from other circuits and from accessible parts		P
2.3.2.1	General requirements	Separation between SELV and TNV-3 circuit. (see appended table 2.10.3/.4)	P
2.3.2.2	Protection by basic insulation	Electric strength test: 1500V, 60 sec.	P
2.3.2.3	Protection by earthing	--	N/A
2.3.2.4	Protection by other constructions .....:	--	N/A
2.3.3	Separation from hazardous voltages	Insulation between primary and TNV is reinforced insulation.	P
	Insulation employed.....:	a)	—
2.3.4	Connection of TNV circuits to other circuits	Not connected to other circuits.	N/A
	Insulation employed.....:	--	—
2.3.5	Test for operating voltages generated externally	Not applied	N/A

IEC 60950-1			
Clause	Requirement + Test	Result - Remark	Verdict

2.4	**Limited current circuits** *Considered for the following parts: C301 of main unit and High Voltage Unit*		P
2.4.1	General requirements	See below.	P
2.4.2	Limit values	(see appended table 2.4.2)	P
	Frequency (Hz).....:	--	—
	Measured current (mA).....:	--	—
	Measured voltage (V) .....:	--	—
	Measured circuit capacitance (nF or µF).....:	--	—
2.4.3	Connection of limited current circuits to other circuits	The limited current circuit is supplied from SELV circuits. HV circuits supplied by 24V dc, secondary circuit.	P

2.5	**Limited power sources** *The following circuits were tested for limited power source:* *Output for DP Unit, Output for Scanner LED and Operation Panel.*		P
	a) Inherently limited output		N/A
	b) Impedance limited output		N/A
	c) Regulating network limited output under normal operating and single fault condition		N/A
	d) Overcurrent protective device limited output	Fuse (YF2002) on Main PWB for Scanner LED and Operation Panel, Fuse (YF7) on Main PWB for 24V to DP-480	P
	Max. output voltage (V), max. output current (A), max. apparent power (VA) .....:	(see appended table 2.5)	—
	Current rating of overcurrent protective device (A) .:	Fuse YF2002 rated: 1A; Fuse YF7rated: 3A The fuse has the characteristics required in remark 4 of table 2C.	—
	Use of integrated circuit (IC) current limiters		N/A

IEC 60950-1			
Clause	Requirement + Test	Result - Remark	Verdict
2.6	**Provisions for earthing and bonding**		P
	Protective Bonding wire is on one side hocked in and soldered to Protective Earth pin of appliance inlet, the other side has ring terminal (fixed by double crimping). Ring terminal fitted with toothed lock is secured to chassis by M4 screw.		—
2.6.1	Protective earthing	a) Metal enclosure and accessible basic insulated conductive parts are reliably bonded to the protective earth terminal. f) Ground of SELV circuits was earthed to reduce touch current.	P
2.6.2	Functional earthing	Functional earthing either separated from hazardous voltages by double- or reinforced insulation or safely connected to PB.	P
2.6.3	Protective earthing and protective bonding conductors		P
2.6.3.1	General	2.6.1 a) metal parts: See below. 2.6.1 f) Ground of SELV: adequate construction for actual current.	P
2.6.3.2	Size of protective earthing conductors	(refers to table 3B, cl. 3.2.5)	P
	Rated current (A), cross-sectional area (mm^2), AWG .....:	Rated 6.3A, 1.0mm^2	—
2.6.3.3	Size of protective bonding conductors	PB wire inlet to chassis is the same size as PE conductor.	P
	Rated current (A), cross-sectional area (mm^2), AWG .....:	--	—
	Protective current rating (A), cross-sectional area (mm^2), AWG .....:	--	—
2.6.3.4	Resistance of earthing conductors and their terminations; resistance (Ω), voltage drop (V), test current (A), duration (min) .....:	(see appended table 2.6.3.4)	P
2.6.3.5	Colour of insulation.....:	PE and PB conductors are green/yellow. Green/Yellow wire not used for other connections.	P
2.6.4	Terminals		P
2.6.4.1	General	Appliance inlet used.	P
2.6.4.2	Protective earthing and bonding terminals	Tested per cl. 2.6.3.4	P

IEC 60950-1			
Clause	Requirement + Test	Result - Remark	Verdict
	Rated current (A), type, nominal thread diameter (mm) .....:	--	—
2.6.4.3	Separation of the protective earthing conductor from protective bonding conductors	Appliance inlet used.	P
2.6.5	Integrity of protective earthing		P
2.6.5.1	Interconnection of equipment	No such system of interconnected equipment.	N/A
2.6.5.2	Components in protective earthing conductors and protective bonding conductors	No switches or fuses in earthing conductors.	P
2.6.5.3	Disconnection of protective earth	Appliance inlet: It is not possible to disconnect earth without disconnecting mains.	P
2.6.5.4	Parts that can be removed by an operator	Plug, Appliance inlet, and Fuser Unit: Earthing connected before and disconnected after hazardous voltage. No other such operator removable parts.	P
2.6.5.5	Parts removed during servicing	It is not necessary to disconnect earthing except for the removing of the earthed parts itself.	P
2.6.5.6	Corrosion resistance	All protective earth connections in compliance with Annex J. Specifically no direct Al – Cu contacts.	P
2.6.5.7	Screws for protective bonding	Thread cutting or space thread screwed connections not used for protective bonding connections.	N/A
2.6.5.8	Reliance on telecommunication network or cable distribution system	The protective earthing of the equipment does not rely on the telecommunication network.	N/A

IEC 60950-1			
Clause	Requirement + Test	Result - Remark	Verdict
2.7	**Overcurrent and earth fault protection in primary circuits**		P
2.7.1	Basic requirements	The built-in device fuse provides overcurrent protection. Pluggable equipment type A Equipment relies on 16A rated fuse or circuit breaker of the building installation for short circuit and earth fault.	P
	Instructions when protection relies on building installation	Neither pluggable equipment type B nor permanent connection.	N/A
2.7.2	Faults not simulated in 5.3.7		P
2.7.3	Short-circuit backup protection	Pluggable equipment type A, the building installation is considered as providing short circuit protection.	P
2.7.4	Number and location of protective devices :	Overcurrent protections by fuse F101, F102, F151 in primary phase. Earth fault protection by fuse or circuit breaker in the building installation.	P
2.7.5	Protection by several devices	Only these fuses in phase or line.	N/A
2.7.6	Warning to service personnel ..... :	No unexpected hazard.	N/A

IEC 60950-1			
Clause	Requirement + Test	Result - Remark	Verdict
2.8	**Safety interlocks**		P
2.8.1	General principles	Safety interlocks are provided and prevent operator from access to hazardous moving parts and hazardous voltages. See below.	P
	Main Unit: Right Cover is interlocked by the Interlock Switch, Right Side located in sec. Power, 24Vdc, to the following parts are cut: High Voltage Unit, Drive Motor and Eject Motor. Other parts, including laser unit and fuser unit remain energized and are protected from access through adequate covers. Accessories: Document Feeder DP-480: Top Cover is interlocked by the Interlock Switch in sec. Power, 24Vdc, to the following parts is cut: Feed Motor, Junction Motor and Clutch		—
2.8.2	Protection requirements	Hazardous voltages and energy levels are de-energized when interlock is activated, moving parts are stopped and/or slowed down to non hazardous speeds. No access to hazardous parts by test finger in interlocked areas.	P
2.8.3	Inadvertent reactivation	Inadvertent reactivation is not possible. Test finger can not override interlock system.	P
2.8.4	Fail-safe operation	Failure in interlock system will result in open circuit condition of the system, no hazard.	P
	Protection against extreme hazard		P
2.8.5	Moving parts	Relevant doors are provided with levers, directly activating the approved interlock switch. No intermediate mechanism involved.	N/A
2.8.6	Overriding	No such systems.	N/A
2.8.7	Switches, relays and their related circuits	Interlock Switches comply with IEC 61058-1. No relays related to interlock.	P
2.8.7.1	Separation distances for contact gaps and their related circuits (mm) .....:	Approved switches.	N/A
2.8.7.2	Overload test	Approved switches.	N/A

IEC 60950-1			
Clause	Requirement + Test	Result - Remark	Verdict
2.8.7.3	Endurance test	Approved switches.	N/A
2.8.7.4	Electric strength test	Not tested per 2.8.7.2 / 3.	N/A
2.8.8	Mechanical actuators	Adequate design of the actuator/switch mechanism, no overstress.	P
2.9	**Electrical insulation**		P
2.9.1	Properties of insulating materials	Natural rubber, asbestos or hygroscopic materials are not used.	P
2.9.2	Humidity conditioning	Humidity treatment conducted for 120h. Humidity conditioning were also conducted to Transformer, Photo Coupler and their alternate components.	P
	Relative humidity (%), temperature (°C) ..... :	93%, 40°C	—
2.9.3	Grade of insulation	Kind of insulation and working voltage considered.	P
2.9.4	Separation from hazardous voltages		P
	Method(s) used ..... :	Method 1: a, b Method 2	—
2.10	**Clearances, creepage distances and distances through insulation**		P
2.10.1	General	Adequate dimensioning confirmed. Overvoltage category I used to determine clearances in secondary circuits.	P
2.10.1.1	Frequency .....:	--	P
2.10.1.2	Pollution degrees .....:	Pollution degree 2.	P
2.10.1.3	Reduced values for functional insulation	Annex G not applied.	N/A
2.10.1.4	Intervening unconnected conductive parts	No considered.	N/A
2.10.1.5	Insulation with varying dimensions	No applied.	N/A
2.10.1.6	Special separation requirements		N/A
2.10.1.7	Insulation in circuits generating starting pulses	No such lamps used.	N/A

IEC 60950-1			
Clause	Requirement + Test	Result - Remark	Verdict
2.10.2	Determination of working voltage	The r.m.s. and the peak voltages were measured on all sources of the switching power supply. Mains supply voltage used and considered for heater unit.	P
2.10.2.1	General		P
2.10.2.2	RMS working voltage	(see appended table 2.10.2)	P
2.10.2.3	Peak working voltage	(see appended table 2.10.2)	P
2.10.3	Clearances		P
2.10.3.1	General	Comply with 2.10.3.3/.4, Annex G not applied.	P
2.10.3.2	Mains transient voltages	Not measured, normal transient levels considered.	N/A
	a) AC mains supply .....:	Overvoltage Category II	P
	b) Earthed d.c. mains supplies .....:	No direct connection to dc mains.	N/A
	c) Unearthed d.c. mains supplies .....:	See above.	N/A
	d) Battery operation .....:	Not measured, normal transient levels considered.	N/A
2.10.3.3	Clearances in primary circuits	(see appended table 2.10.3/.4)	P
2.10.3.4	Clearances in secondary circuits	(see appended table 2.10.3/.4)	P
2.10.3.5	Clearances in circuits having starting pulses	No such lamps used.	N/A
2.10.3.6	Transients from a.c. mains supply .....:	(see cl. 2.10.3.9)	N/A
2.10.3.7	Transients from d.c. mains supply .....:	--	N/A
2.10.3.8	Transients from telecommunication networks and cable distribution systems .....:	--	N/A
2.10.3.9	Measurement of transient voltage levels	Not measured, normal transient levels considered.	N/A
	a) Transients from a mains suplply		N/A
	For an a.c. mains supply .....:	--	N/A
	For a d.c. mains supply .....:	--	N/A
	b) Transients from a telecommunication network :	--	N/A
2.10.4	Creepage distances		P
2.10.4.1	General		P
2.10.4.2	Material group and caomparative tracking index	See below.	P
	CTI tests .....:	Material group IIIb is assumed to be used.	—

IEC 60950-1			
Clause	Requirement + Test	Result - Remark	Verdict
2.10.4.3	Minimum creepage distances	(see appended table 2.10.3/.4)	P
2.10.5	Solid insulation		P
2.10.5.1	General		P
2.10.5.2	Distances through insulation	(see appended table 2.10.5)	P
2.10.5.3	Insulating compound as solid insulation	No such insulations.	N/A
2.10.5.4	Semiconductor devices	Photo-couplers are approved components.	N/A
2.10.5.5.	Cemented joints	Not considered.	N/A
2.10.5.6	Thin sheet material – General	Provided within transformer: T401	P
2.10.5.7	Separable thin sheet material		P
	Number of layers (pcs) .....:	2 layers.	—
2.10.5.8	Non-separable thin sheet material	No such construction.	N/A
2.10.5.9	Thin sheet material – standard test procedure		N/A
	Electric strength test		—
2.10.5.10	Thin sheet material – alternative test procedure		P
	Electric strength test	1 layer tape at AC 3000V.	—
2.10.5.11	Insulation in wound components	no planar transformers used.	N/A
2.10.5.12	Wire in wound components	Not considered.	N/A
	Working voltage .....:	--	N/A
	a) Basic insulation not under stress .....:	--	N/A
	b) Basic, supplemetary, reinforced insulation .....:	--	N/A
	c) Compliance with Annex U .....:	--	N/A
	Two wires in contact inside wound component; angle between 45° and 90° .....:	--	N/A
2.10.5.13	Wire with solvent-based enamel in wound components	Not considered.	N/A
	Electric strength test		—
	Routine test		N/A
2.10.5.14	Additional insulation in wound components	Not applied.	N/A
	Working voltage .....:	--	N/A
	- Basic insulation not under stress .....:	--	N/A
	- Supplemetary, reinforced insulation .....:	--	N/A
2.10.6	Construction of printed boards	--	P
2.10.6.1	Uncoated printed boards	(see appended table 2.10.3/.4)	P

IEC 60950-1			
Clause	Requirement + Test	Result - Remark	Verdict
2.10.6.2	Coated printed boards	Coating not tested.	N/A
2.10.6.3	Insulation between conductors on the same inner surface of a printed board		N/A
2.10.6.4	Insulation between conductors on different layers of a printed board	Not used to provide supplementary or double/reinforced insulation.	N/A
	Distance through insulation		N/A
	Number of insulation layers (pcs).....:	--	N/A
2.10.7	Component external terminations	No such components.	N/A
2.10.8	Tests on coated printed boards and coated components	Coating not tested.	N/A
2.10.8.1	Sample preparation and preliminary inspection		N/A
2.10.8.2	Thermal conditioning		N/A
2.10.8.3	Electric strength test		N/A
2.10.8.4	Abrasion resistance test		N/A
2.10.9	Thermal cycling	Photo Coupler (PC101, PC102, PC402), Alternate, Model PS2561DL1-1 on SWPS was certified. Photo Coupler (PC501, PC502), Alternate, Model 3SH21 on SWPS was certified. Photo Coupler (PC1), Model TLP620, TKP627 and TLP621 on Fax System (X) were certified. Alternate Photo Coupler (PC1), Model TLP320 and TLP629 on Fax System (X) were certified. Alternate Photo Coupler (PC1), Model TLP181 on Fax System (X) was certified.	P
2.10.10	Test for Pollution Degree 1 environment and insulating compound	Not applied	N/A

IEC 60950-1			
Clause	Requirement + Test	Result - Remark	Verdict
2.10.11	Tests for semiconductor devices and cemented joints	Photo Coupler (PC101, PC102, PC402), Alternate, Model PS2561DL1-1 on SWPS was certified. Photo Coupler (PC501, PC502), Alternate, Model 3SH21 on SWPS was certified. Photo Coupler (PC1), Model TLP620, TKP627 and TLP621 on Fax System (X) were certified. Alternate Photo Coupler (PC1), Model TLP320 and TLP629 on Fax System (X) were certified. Alternate Photo Coupler (PC1), Model TLP181 on Fax System (X) was certified.	P
2.10.12	Enclosed and sealed parts	Not applied.	N/A

IEC 60950-1			
Clause	Requirement + Test	Result - Remark	Verdict
3	**WIRING, CONNECTIONS AND SUPPLY**		P
3.1	General		P
3.1.1	Current rating and overcurrent protection	Sufficient cross sectional area of internal wiring. Internal wires are UL recognized wires.	P
3.1.2	Protection against mechanical damage	Wires do not touch sharp edges and heat sinks that could damage the insulation and cause hazard.	P
3.1.3	Securing of internal wiring	Internal secondary wires with basic isolation are routed so that they are not close to any live bare components. Wires are adequately fixed to prevent excessive strain or damage of the conductors' insulation.	P
3.1.4	Insulation of conductors	The insulation of the individual conductors is suitable for the application and the working voltage. (see appended table 5.2)	P
3.1.5	Beads and ceramic insulators	Ends of heater-lamp are adequately fixed, 10N applied, no hazard.	P
3.1.6	Screws for electrical contact pressure	Relevant electrical and earthing connections engage at least two complete threads into metal. No screws of insulating material are used for electrical and earthing connections.	P
3.1.7	Insulating materials in electrical connections	Relevant current carrying and all protective earthing connections are metal to metal.	P
3.1.8	Self-tapping and spaced thread screws	Where safety is involved, thread cutting or space thread screws not used for current carrying electrical connections.	N/A

IEC 60950-1			
Clause	Requirement + Test	Result - Remark	Verdict
3.1.9	Termination of conductors	Conductors are suitable terminated, creepage and clearances maintained, second securing for soldered terminations provided.	P
	10 N pull test	10N applied to relevant conductors.	P
3.1.10	Sleeving on wiring	Relevant sleeving on primary and secondary wirings reliably kept in position.	P

IEC 60950-1			
Clause	Requirement + Test	Result - Remark	Verdict

3.2	**Connection to a mains supply**		P
3.2.1	Means of connection		P
3.2.1.1	Connection to an a.c. mains supply	Appliance inlet.	P
3.2.1.2	Connection to a d.c. mains supply	No connection to DC mains.	N/A
3.2.2	Multiple supply connections	Only one supply connection.	N/A
3.2.3	Permanently connected equipment	Not such equipment.	N/A
	Number of conductors, diameter of cable and conduits (mm) ..... :	--	—
3.2.4	Appliance inlets	The appliance inlet complies with IEC 60320-1 and is located at the rear of the unit. The power cord can be inserted without difficulties and does not support the unit.	P
3.2.5	Power supply cords		P
3.2.5.1	AC power supply cords	The power supply cord is provided with this unit.	P
	Type ..... :	H05VV-F	—
	Rated current (A), cross-sectional area (mm^2), AWG ..... :	6.3A max.; 1.0mm^2	—
3.2.5.2	DC power supply cords	No connection to dc main.	N/A
3.2.6	Cord anchorages and strain relief	Appliance inlet used.	N/A
	Mass of equipment (kg), pull (N) ..... :	--	—
	Longitudinal displacement (mm) ..... :	--	—
3.2.7	Protection against mechanical damage	No sharp points or cutting edges that may damage the power supply cord.	P
3.2.8	Cord guards	Neither hand-held nor intended to be moved while in operation.	N/A
	Diameter or minor dimension D (mm); test mass (g) ..... :	--	—
	Radius of curvature of cord (mm)..... :	--	—
3.2.9	Supply wiring space	Appliance inlet used.	N/A

3.3	**Wiring terminals for connection of external conductors** *No terminals, appliance inlet and detachable power supply cord.*		N/A
3.3.1	Wiring terminals		N/A

IEC 60950-1			
Clause	Requirement + Test	Result - Remark	Verdict
3.3.2	Connection of non-detachable power supply cords		N/A
3.3.3	Screw terminals		N/A
3.3.4	Conductor sizes to be connected		N/A
	Rated current (A), cord/cable type, cross-sectional area (mm^2)..... :	--	—
3.3.5	Wiring terminal sizes		N/A
	Rated current (A), type, nominal thread diameter (mm) ..... :	--	—
3.3.6	Wiring terminal design		N/A
3.3.7	Grouping of wiring terminals		N/A
3.3.8	Stranded wire		N/A

3.4	**Disconnection from the mains supply**		P
3.4.1	General requirement	Disconnect device is provided.	P
3.4.2	Disconnect devices	Appliance coupler	P
3.4.3	Permanently connected equipment	Pluggable equipment type A.	N/A
3.4.4	Parts which remain energized	No parts remain energized.	P
3.4.5	Switches in flexible cords	Not provided.	N/A
3.4.6	Number of poles - single-phase and d.c. equipment	The appliance coupler disconnects both poles simultaneously.	P
3.4.7	Number of poles - three-phase equipment	Single phase equipment.	N/A
3.4.8	Switches as disconnect devices	Switch not used as disconnect device.	N/A
3.4.9	Plugs as disconnect devices	Appliance coupler used.	N/A
3.4.10	Interconnected equipment	No such interconnection	N/A
3.4.11	Multiple power sources	Single supply connection.	N/A

3.5	**Interconnection of equipment**		P
3.5.1	General requirements	See below.	P
3.5.2	Types of interconnection circuits ..... :	SELV. TNV-3.	P
3.5.3	ELV circuits as interconnection circuits	No ELV circuits.	N/A
3.5.4	Data ports for additional equipment	Supplied from limited power source. (see cl. 2.5)	P

IEC 60950-1			
Clause	Requirement + Test	Result - Remark	Verdict

4	**PHYSICAL REQUIREMENTS**		P
4.1	Stability		P
	Angle of 10°	Stable mechanical construction, equipment does not overbalance when tilted to an angle of 10° from its normal upright position.	P
	Test force (N) .....:	250N	P

4.2	**Mechanical strength**		P
4.2.1	General	Outer enclosure shows sufficient strength to withstand expected handling conditions.	P
	Rack-mounted equipment.	Not rack-mounted.	N/A
4.2.2	Steady force test, 10 N	Applied to relevant parts, no hazard.	P
4.2.3	Steady force test, 30 N	Applied to relevant parts, no hazard.	P
4.2.4	Steady force test, 250 N	250N applied to outer enclosure. Test points: Fax Board Lid, WIFI Lids, Network Board Lid, Rear PWB Shield, Deck Connector Shield, Right Middle Cover, Front Cover, Right Tray, Exit Front Cover, Front Right Cover, Rear Cover, MPF Base, Exit Rear Cover, Middle Rear Cover, Exit Upper Cover PF-480 Rear Cover, Connector Cover, Frame Base	P
4.2.5	Impact test	No hazardous parts became accessible after test.	P
	Fall test	Test points: Right Tray, Exit Front Cover, MPF Base, Exit Upper Cover PF-480 Frame Base	P

IEC 60950-1			
Clause	Requirement + Test	Result - Remark	Verdict
	Swing test	Test points: Fax Board Lid, WIFI Lids, Network Board Lid, Rear PWB Shield, Deck Connector Shield, Right Middle Cover, Front Cover, Front Right Cover, Rear Cover, Exit Rear Cover, Middle Rear Cover PF-480 Rear Cover, Connector Cover	P
4.2.6	Drop test; height (mm) .....:	Neither direct plug-in nor hand held.	N/A
4.2.7	Stress relief test	After 7h at 75°C and cooling down to room temperature, no shrinkage, distortion or loosing of enclosure parts was noticeable on the unit.	P
4.2.8	Cathode ray tubes	No CRT.	N/A
	Picture tube separately certified .....:	--	N/A
4.2.9	High pressure lamps	No such lamp.	N/A
4.2.10	Wall or ceiling mounted equipment; force (N) .....:	Not intended for wall or ceiling mounting.	N/A

4.3	**Design and construction**		P
4.3.1	Edges and corners	Edges and corners of the enclosure are rounded and smooth.	P
4.3.2	Handles and manual controls; force (N) .....:	15N (power switch)	P
4.3.3	Adjustable controls	Full range circuit, no voltage adjustment necessary. Operational controls not likely to cause any hazard.	N/A
4.3.4	Securing of parts	Electrical and mechanical connections can be expected to withstand usual mechanical stress. Relevant screws provided with lock-washer.	P
4.3.5	Connection by plugs and sockets	In operator and service areas, mismating prevented by incompatible form or location.	P
4.3.6	Direct plug-in equipment	Not direct plug-in.	N/A

IEC 60950-1			
Clause	Requirement + Test	Result - Remark	Verdict
	Torque .....:	--	—
	Compliance with the relevant mains plug standard .....:	--	N/A
4.3.7	Heating elements in earthed equipment	Each heater lamp protected by certified thermal cutout in one phase and TRIAC in the other.	P
4.3.8	Batteries	Lithium battery circuits in Main PWB utilize a diode in series with a 1kΩ resistor.	P
	- Overcharging of a rechargeable battery		N/A
	- Unintentional charging of a non-rechargeable battery	(see above)	P
	- Reverse charging of a rechargeable battery		N/A
	- Excessive discharging rate for any battery	(see above)	P
4.3.9	Oil and grease	Insulation not in contact with oil or grease.	N/A
4.3.10	Dust, powders, liquids and gases	Equipment in intended use not considered to be exposed to these.	N/A
4.3.11	Containers for liquids or gases	No liquid contained.	N/A
4.3.12	Flammable liquids .....:	No flammable liquids present.	N/A
	Quantity of liquid (l) .....:	--	N/A
	Flash point (°C) .....:	--	N/A
4.3.13	Radiation	See below.	P
4.3.13.1	General	Adequate construction confirmed.	P
4.3.13.2	Ionizing radiation	No ionizing radiation.	N/A
	Measured radiation (pA/kg) .....:	--	—
	Measured high-voltage (kV) .....:	--	—
	Measured focus voltage (kV) .....:	--	—
	CRT markings .....:	--	—
4.3.13.3	Effect of ultraviolet (UV) radiation on materials	No ultraviolet (UV) radiation.	N/A
	Part, property, retention after test, flammability classification .....:	--	N/A
4.3.13.4	Human exposure to ultraviolet (UV) radiation .....:	--	N/A
4.3.13.5	Lasers (including laser diodes) and LEDs		P

IEC 60950-1			
Clause	Requirement + Test	Result - Remark	Verdict
4.3.13.5.1	Lasers (including laser laser diodes)	For laser see IEC 60825-1 test report. Indicator LED's below laser class 1 limits.	P
	Laser class .....:	Class 1	—
4.3.13.5.2	Light emitting diodes (LEDs)	Only low power LED	N/A
4.3.13.6	Other types .....:	--	N/A

IEC 60950-1			
Clause	Requirement + Test	Result - Remark	Verdict
4.4	Protection against hazardous moving parts		P
4.4.1	General	Access to hazardous moving parts prevented by construction.	P
4.4.2	Protection in operator access areas .....:	Operator accessible moving parts represent no hazard, e.g. paper feeding / –exit areas.	P
	Household and home/office document/media shredders	Not shredder	N/A
4.4.3	Protection in restricted access locations ……..:	Not intended to be installed there.	N/A
4.4.4	Protection in service access areas	No unexpected hazard.	N/A
4.4.5	Protection against moving fan blades	No user accessible fan blade. Service accessible fan blade: see cl.4.4.5.3	P
4.4.5.1	General	Cooling Fan Type: D08K-24TU 83 (AX) m = 0.06kg r = 40mm N = 3500rpm K = 721.34 a): 0.53	P
	Not considered to cause pain or injury. a)……..…..:	$\frac{r/\text{min}}{15\,000} + \frac{K\ \text{factor}}{2\,400}$ = Less than 1 (see above)	P
	Is considered to cause pain, not injury. b). ……..:	--	N/A
	Considered to cause injury. c) ……..……:	--	N/A
4.4.5.2	Protection for users	No user accessible fan blade.	N/A
	Use of symbol or warning ..……:	--	N/A
4.4.5.3	Protection for service persons	Inadvertent contact by service person is impossible.	N/A
	Use of symbol or warning ……:	--	N/A

IEC 60950-1			
Clause	Requirement + Test	Result - Remark	Verdict

4.5	**Thermal requirements**		P
4.5.1	General		P
4.5.2	Temperature tests	(see appended table 4.5)	P
	Normal load condition per Annex L .....:	Method L.5	—
4.5.3	Temperature limits for materials	(see appended table 4.5)	P
4.5.4	Touch temperature limits	(see appended table 4.5)	P
4.5.5	Resistance to abnormal heat .....:	(see appended table 4.5.5)	P

4.6	**Openings in enclosures**		P
4.6.1	Top and side openings	Ventilation openings – size and design prevents entering of foreign objects to fall on parts with hazardous voltage. Side openings comply with the 5° angle projection. Requirements for fire enclosure considered. Accessories except for DP-480: No hazardous voltages, SELV only	P
	Dimensions (mm) .....:	(see appended table 4.6.1)	—
4.6.2	Bottoms of fire enclosures	Protection against emission of flame, molten metal, flaming or glowing particles or drops by constructions.	P
	Construction of the bottomm, dimensions (mm) ....:	No openings below parts requiring fire enclosure.	—
4.6.3	Doors or covers in fire enclosures	Doors and covers are interlocked per cl. 2.8.	P
4.6.4	Openings in transportable equipment	Not transportable equipment.	N/A
4.6.4.1	Constructional design measures		N/A
	Dimensions (mm) .....:	--	—
4.6.4.2	Evaluation measures for larger openings		N/A
4.6.4.3	Use of metallized parts		N/A
4.6.5	Adhesives for constructional purposes	Not used.	N/A
	Conditioning temperature (°C), time (weeks).....:	--	—

IEC 60950-1			
Clause	Requirement + Test	Result - Remark	Verdict
4.7	**Resistance to fire**		P
4.7.1	Reducing the risk of ignition and spread of flame	Materials with the required flammability classes are used. Safety relevant components used within their specified rating. Electrical parts are not likely to ignite nearby materials. Temperatures see 4.5.1.	P
	Method 1, selection and application of components wiring and materials	(see appended table 1.5.1)	P
	Method 2, application of all of simulated fault condition tests		P
4.7.2	Conditions for a fire enclosure	See below.	P
4.7.2.1	Parts requiring a fire enclosure	Components with windings, wiring, semiconductor devices, resistors, capacitors and inductors are located inside a fire enclosure. (All PCB's are V-1 or better.)	P
4.7.2.2	Parts not requiring a fire enclosure	The following parts are located outside a fire enclosure: Connectors classified V-1 or better for DP-480. The following parts are supplied from a limited power source (no fire enclosure required): Two USB connectors.	N/A
4.7.3	Materials		P
4.7.3.1	General	Materials with the required flammability classes are used. For overheating of VDR (NR151) by fault conditions, VDR (NR151) was mounted on PCB with min. V-1 and other components/materials (C151, C153, L151) within 13 mm from VDR were min. V-1 Class Material or approved	P
4.7.3.2	Materials for fire enclosures	Metal enclosure. Plastic enclosures: 5VB or better (see appended table 1.5.1)	P
4.7.3.3	Materials for components and other parts outside fire enclosures	Decorative parts rated at least HB.	P

IEC 60950-1			
Clause	Requirement + Test	Result - Remark	Verdict
4.7.3.4	Materials for components and other parts inside fire enclosures	Internal components except small parts are V-2, HF-2 or better. Small parts were mounted on min. V-1 PCB.	P
4.7.3.5	Materials for air filter assemblies	No air filter assemblies.	N/A
4.7.3.6	Materials used in high-voltage components	Transformers main materials of flammability V-2 or better (pr. bobbin, anode cap.)	P

IEC 60950-1			
Clause	Requirement + Test	Result - Remark	Verdict
5	**ELECTRICAL REQUIREMENTS AND SIMULATED ABNORMAL CONDITIONS**		P
5.1	**Touch current and protective conductor current**		P
5.1.1	General	Tested for TN system.	P
5.1.2	Configuration of equipment under test (EUT)		P
5.1.2.1	Single connection to an a.c. mains supply	Single supply, independently tested.	P
5.1.2.2	Redundant multiple connections to an a.c. mains supply	Single-phase equipment.	N/A
5.1.2.3	Simultaneous multiple connections to an a.c. mains supply		N/A
5.1.3	Test circuit	Per figure 5A.	P
5.1.4	Application of measuring instrument	Per Annex D.	P
5.1.5	Test procedure		P
5.1.6	Test measurements		P
	Supply voltage (V) .....:	(see appended table 5.1)	—
	Measured touch current (mA) .....:	(see appended table 5.1)	—
	Max. allowed touch current (mA) .....:	(see appended table 5.1)	—
	Measured protective conductor current (mA) .....:	(see appended table 5.1)	—
	Max. allowed protective conductor current (mA)...:	3.5mA	—
5.1.7	Equipment with touch current exceeding 3,5 mA	Leakage current does not exceed 3.5mA	N/A
5.1.7.1	General .....:	--	N/A
5.1.7.2	Simultaneous multiple connections to the supply	Single supply equipment.	N/A
5.1.8	Touch currents to telecommunication networks and cable distribution systems and from telecommunication networks	Per figure 5A.	P
5.1.8.1	Limitation of the touch current to a telecommunication network or to a cable distribution system		P
	Supply voltage (V) .....:	(see appended table 5.1)	—
	Measured touch current (mA) .....:	(see appended table 5.1)	—
	Max. allowed touch current (mA) .....:	0.25 mA	—
5.1.8.2	Summation of touch currents from telecommunication networks		N/A
	a) EUT with earthed telecommunication ports .....:	--	N/A
	b) EUT whose telecommunication ports have no reference to protective earth		N/A

IEC 60950-1			
Clause	Requirement + Test	Result - Remark	Verdict
5.2	**Electric strength**		P
5.2.1	General	(see appended table 5.2)	P
5.2.2	Test procedure		P
5.3	**Abnormal operating and fault conditions**		P
5.3.1	Protection against overload and abnormal operation	(see appended table 5.3)	P
5.3.2	Motors	Motors locked, stepping motors excluded. Temperature limits of Annex B not exceeded. (see appended Annex B)	P
5.3.3	Transformers	Adequate protection against overload provided. (see appended Annex C)	P
5.3.4	Functional insulation.....:	Short circuit tests. (see appended table 5.3)	P
5.3.5	Electromechanical components	Movement locked. Solenoid and clutches continuously energized. Stepping motors driver short or one winding continuously energized. (see appended table 5.3)	P
5.3.6	Audio amplifiers in ITE .....:	Not provided.	N/A
5.3.7	Simulation of faults	(see appended table 5.3)	P
5.3.8	Unattended equipment	Fault condition in temperature regulating circuit for heater lamps did not result in a hazard. (see appended table 5.3)	P
5.3.9	Compliance criteria for abnormal operating and fault conditions	No fire propagated beyond the equipment. No molten metal was emitted. Electric strength test primary to SELV passed.	P
5.3.9.1	During the tests	No fire propagated beyond the equipment. No molten metal was emitted.	P
5.3.9.2	After the tests	Electric strength test primary to SELV passed.	P

IEC 60950-1			
Clause	Requirement + Test	Result - Remark	Verdict

6	**CONNECTION TO TELECOMMUNICATION NETWORKS**		P
6.1	Protection of telecommunication network service persons, and users of other equipment connected to the network, from hazards in the equipment		P
6.1.1	Protection from hazardous voltages		P
6.1.2	Separation of the telecommunication network from earth		P
	Requirements	Sufficient insulation provided. Rated operating voltage DC 430V or DC 1000V. Limit: Upeak+ΔUsp+ΔUsa = 266V max for DC 430V or 560V max. for DC 1000V	P
6.1.2.1	Supply voltage (V) .....:	240V	—
	Current in the test circuit (mA) .....:	Measured leakage current with surge suppressors: 0.0mA	—
6.1.2.2	Exclusions .....:	--	N/A

6.2	**Protection of equipment users from overvoltages on telecommunication networks**		P
6.2.1	Separation requirements		P
6.2.2	Electric strength test procedure	See below.	P
6.2.2.1	Impulse test	Tested with 1.5kV on surge absorber A1, A2 (type RA-102MS-V7-F(5)), varistor V3,V4 (type TND09V-431K) required by cl. 6.2.2.2.	P
6.2.2.2	Steady-state test	Operation Panel: 3.0kV A1, A2 or V3, V4 removed for the followings. Enclosure (PE): 1.5kV I/O connectors: 1.5kV Voltages applied for were requested by the manufacturer.	P
6.2.2.3	Compliance criteria	No flashover or breakdown.	P

IEC 60950-1			
Clause	Requirement + Test	Result - Remark	Verdict

6.3	**Protection of the telecommunication wiring system from overheating**		N/A
	Max. output current (A) .....:	Line is not used for power distribution.	—
	Current limiting method .....:	--	—

7	**CONNECTION TO CABLE DISTRIBUTION SYSTEMS** *No Cable Distribution System.*		N/A
7.1	General		N/A
7.2	Protection of cable distribution system service persons, and users of other equipment connected to the system, from hazardous voltages in the equipment		N/A
7.3	Protection of equipment users from overvoltages on the cable distribution system		N/A
7.4	Insulation between primary circuits and cable distribution systems		N/A
7.4.1	General		N/A
7.4.2	Voltage surge test		N/A
7.4.3	Impulse test		N/A

IEC 60950-1			
Clause	Requirement + Test	Result - Remark	Verdict

A	**ANNEX A, TESTS FOR RESISTANCE TO HEAT AND FIRE** *Not tested; flammability data were taken from available literature.*		N/A
A.1	Flammability test for fire enclosures of movable equipment having a total mass exceeding 18 kg, and of stationary equipment (see 4.7.3.2)		N/A
A.1.1	Samples.....:	--	—
	Wall thickness (mm) .....:	--	—
A.1.2	Conditioning of samples; temperature (°C) .....:	--	N/A
A.1.3	Mounting of samples .....:	--	N/A
A.1.4	Test flame (see IEC 60695-11-3)		N/A
	Flame A, B, C or D .....:	--	—
A.1.5	Test procedure		N/A
A.1.6	Compliance criteria		N/A
	Sample 1 burning time (s) .....:	--	—
	Sample 2 burning time (s) .....:	--	—
	Sample 3 burning time (s) .....:	--	—
A.2	Flammability test for fire enclosures of movable equipment having a total mass not exceeding 18 kg, and for material and components located inside fire enclosures (see 4.7.3.2 and 4.7.3.4)		N/A
A.2.1	Samples, material.....:	--	—
	Wall thickness (mm) .....:	--	—
A.2.2	Conditioning of samples; temperature (°C) .....:	--	N/A
A.2.3	Mounting of samples .....:	--	N/A
A.2.4	Test flame (see IEC 60695-11-4)		N/A
	Flame A, B or C .....:	--	—
A.2.5	Test procedure		N/A
A.2.6	Compliance criteria		N/A
	Sample 1 burning time (s) .....:	--	—
	Sample 2 burning time (s) .....:	--	—
	Sample 3 burning time (s) .....:	--	—
A.2.7	Alternative test acc. to IEC 60695-11-5, cl. 5 and 9		N/A
	Sample 1 burning time (s) .....:	--	—
	Sample 2 burning time (s) .....:	--	—
	Sample 3 burning time (s) .....:	--	—
A.3	Hot flaming oil test (see 4.6.2)		N/A

IEC 60950-1			
Clause	Requirement + Test	Result - Remark	Verdict
A.3.1	Mounting of samples		N/A
A.3.2	Test procedure		N/A
A.3.3	Compliance criterion		N/A
B	**ANNEX B, MOTOR TESTS UNDER ABNORMAL CONDITIONS (see 4.7.2.2 and 5.3.2)**		P
B.1	General requirements		P
	Position .....:	(see appended table 1.5.1)	—
	Manufacturer .....:	(see appended table 1.5.1)	—
	Type .....:	(see appended table 1.5.1)	—
	Rated values .....:	(see appended table 1.5.1)	—
B.2	Test conditions	Motors were locked in a bench test set-up. For stepping motors no test performed. (see appended table annex B)	P
B.3	Maximum temperatures	(see original appended table annex B)	P
B.4	Running overload test	DC motors in secondary only	N/A
B.5	Locked-rotor overload test	DC motors in secondary only.	N/A
	Test duration (days) .....:	--	—
	Electric strength test: test voltage (V) .....:	--	—
B.6	Running overload test for d.c. motors in secondary circuits	Running overload not likely. Electronically controlled.	N/A
B.6.1	General		N/A
B.6.2	Test procedure		N/A
B.6.3	Alternative test procedure		N/A
B.6.4	Electric strength test; test voltage (V) .....:	--	N/A
B.7	Locked-rotor overload test for d.c. motors in secondary circuits		P
B.7.1	General	See below.	P
B.7.2	Test procedure	(tested per B.7.3)	N/A
B.7.3	Alternative test procedure	(see appended table annex B)	P
B.7.4	Electric strength test; test voltage (V) .....:	--	N/A
B.8	Test for motors with capacitors	(none)	N/A
B.9	Test for three-phase motors	(none)	N/A

IEC 60950-1			
Clause	Requirement + Test	Result - Remark	Verdict
B.10	Test for series motors	(none)	N/A
	Operating voltage (V) .....:	--	—
C	**ANNEX C, TRANSFORMERS (see 1.5.4 and 5.3.3)**		P
	Position .....:	Pri – sec transformer: T401	—
	Manufacturer .....:	(see appended table 1.5.1)	—
	Type .....:	(see appended table 1.5.1)	—
	Rated values .....:	(see appended table 1.5.1)	—
	Method of protection..... :	--	—
C.1	Overload test	(see appended table 5.3)	P
C.2	Insulation	(see appended table 2.10.5, 5.2)	P
	Protection from displacement of windings..... :	Adequate construction; for further details, see appended table 2.10.3/4.	P
D	**ANNEX D, MEASURING INSTRUMENTS FOR TOUCH-CURRENT TESTS (see 5.1.4)**		P
D.1	Measuring instrument		P
D.2	Alternative measuring instrument		N/A
E	**ANNEX E, TEMPERATURE RISE OF A WINDING (see 1.4.13)** *Thermocouples used.*		N/A
F	**ANNEX F, MEASUREMENT OF CLEARANCES AND CREEPAGE DISTANCES (see 2.10 and Annex G)** *Measured accordingly.*		P

IEC 60950-1			
Clause	Requirement + Test	Result - Remark	Verdict
G	**ANNEX G, ALTERNATIVE METHOD FOR DETERMINING MINIMUM CLEARANCES** *Not used.*		N/A
G.1	Clearances		N/A
G.1.1	General		N/A
G.1.2	Summary of the procedure for determining minimum clearances		N/A
G.2	Determination of mains transient voltage (V)		N/A
G.2.1	AC mains supply .....:	--	N/A
G.2.2	Earthed d.c. mains supplies .....:	--	N/A
G.2.3	Unearthed d.c. mains supplies .....:	--	N/A
G.2.4	Battery operation .....:	--	N/A
G.3	Determination of telecommunication network transient voltage (V) .....:	--	N/A
G.4	Determination of required withstand voltage (V)		N/A
G.4.1	Mains transients and internal repetitive peaks .....:	--	N/A
G.4.2	Transients from telecommunication networks .....:	--	N/A
G.4.3	Combination of transients		N/A
G.4.4	Transients from cable distribution systems		N/A
G.5	Measurement of transient voltages (V)		N/A
	a) Transients from a mains supply		N/A
	For an a.c. mains supply		N/A
	For a d.c. mains supply		N/A
	b) Transients from a telecommunication network		N/A
G.6	Determination of minimum clearances .....:	--	N/A

IEC 60950-1			
Clause	Requirement + Test	Result - Remark	Verdict

H	**ANNEX H, IONIZING RADIATION (see 4.3.13)** *No ionising radiation source.*	N/A

J	**ANNEX J, TABLE OF ELECTROCHEMICAL POTENTIALS (see 2.6.5.6)**		P
	Metal(s) used .....:	Mild steel/ Ni on steel.	—

K	**ANNEX K, THERMAL CONTROLS (see 1.5.3 and 5.3.8)**		N/A
K.1	Making and breaking capacity		N/A
K.2	Thermostat reliability; operating voltage (V) .....:	--	N/A
K.3	Thermostat endurance test; operating voltage (V) .....:	--	N/A
K.4	Temperature limiter endurance; operating voltage (V) .....:	--	N/A
K.5	Thermal cut-out reliability		N/A
K.6	Stability of operation		N/A

L	**ANNEX L, NORMAL LOAD CONDITIONS FOR SOME TYPES OF ELECTRICAL BUSINESS EQUIPMENT (see 1.2.2.1 and 4.5.2)**		P
L.1	Typewriters		N/A
L.2	Adding machines and cash registers		N/A
L.3	Erasers		N/A
L.4	Pencil sharpeners		N/A
L.5	Duplicators and copy machines	Tested at continuous copying.	P
L.6	Motor-operated files		N/A
L.7	Other business equipment		N/A

IEC 60950-1			
Clause	Requirement + Test	Result - Remark	Verdict

M	**ANNEX M, CRITERIA FOR TELEPHONE RINGING SIGNALS (see 2.3.1)**		N/A
M.1	Introduction		N/A
M.2	Method A		N/A
M.3	Method B		N/A
M.3.1	Ringing signal		N/A
M.3.1.1	Frequency (Hz) .....:	--	—
M.3.1.2	Voltage (V) .....:	--	—
M.3.1.3	Cadence; time (s), voltage (V) .....:	--	—
M.3.1.4	Single fault current (mA) .....:	--	—
M.3.2	Tripping device and monitoring voltage .....:	--	N/A
M.3.2.1	Conditions for use of a tripping device or a monitoring voltage		N/A
M.3.2.2	Tripping device		N/A
M.3.2.3	Monitoring voltage (V) .....:	--	N/A

IEC 60950-1			
Clause	Requirement + Test	Result - Remark	Verdict

N	**ANNEX N, IMPULSE TEST GENERATORS (see 1.5.7.2, 1.5.7.3, 2.10.3.9, 6.2.2.1, 7.3.2, 7.4.3 and Clause G.5)**		P
N.1	ITU-T impulse test generators		P
N.2	IEC 60065 impulse test generator		N/A

P	**ANNEX P, NORMATIVE REFERENCES**		—

Q	**ANNEX Q, Voltage dependent resistors (VDRs) (see 1.5.9.1)**		P
	a) Preferred climatic categories .....:	-40/85/56	P
	b) Maximum continuous voltage .....:	300	P
	c) Pulse current .....:	--	P

R	**ANNEX R, EXAMPLES OF REQUIREMENTS FOR QUALITY CONTROL PROGRAMMES**		N/A
R.1	Minimum separation distances for unpopulated coated printed boards (see 2.10.6.2)		N/A
R.2	Reduced clearances (see 2.10.3)		N/A

S	**ANNEX S, PROCEDURE FOR IMPULSE TESTING (see 6.2.2.3)** *Considered.*		P
S.1	Test equipment		P
S.2	Test procedure		P
S.3	Examples of waveforms during impulse testing		P

IEC 60950-1			
Clause	Requirement + Test	Result - Remark	Verdict
T	**ANNEX T, GUIDANCE ON PROTECTION AGAINST INGRESS OF WATER (see 1.1.2)** *Not applied.*		N/A
U	**ANNEX U, INSULATED WINDING WIRES FOR USE WITHOUT INTERLEAVED INSULATION (see 2.10.5.4)** *Not used.*		N/A
V	**ANNEX V, AC POWER DISTRIBUTION SYSTEMS (see 1.6.1)** *Considered.*		P
V.1	Introduction		P
V.2	TN power distribution systems		P
W	**ANNEX W, SUMMATION OF TOUCH CURRENTS** *Not applied.*		N/A
W.1	Touch current from electronic circuits		N/A
W.1.1	Floating circuits		N/A
W.1.2	Earthed circuits		N/A
W.2	Interconnection of several equipments		N/A
W.2.1	Isolation		N/A
W.2.2	Common return, isolated from earth		N/A
W.2.3	Common return, connected to protective earth		N/A
X	**ANNEX X, MAXIMUM HEATING EFFECT IN TRANSFORMER TESTS (see clause C.1)** *Considered.*		P
X.1	Determination of maximum input current		P
X.2	Overload test procedure		P

IEC 60950-1			
Clause	Requirement + Test	Result - Remark	Verdict
Y	**ANNEX Y, ULTRAVIOLET LIGHT CONDITIONING TEST (see 4.3.13.3)** *No ultraviolet light source.*		N/A
Y.1	Test apparatus .....:	--	N/A
Y.2	Mounting of test samples .....:	--	N/A
Y.3	Carbon-arc light-exposure apparatus .....:	--	N/A
Y.4	Xenon-arc light exposure apparatus .....:	--	N/A
Z	**ANNEX Z, OVERVOLTAGE CATEGORIES (see 2.10.3.2 and Clause G.2)** *Considered.*		P
AA	**ANNEX AA, MANDREL TEST (see 2.10.5.8)** *Not applied*		N/A
BB	**ANNEX BB, CHANGES IN THE SECOND EDITION**		—
CC	**ANNEX CC, Evaluation of integrated circuit (IC) current limiters** *Not applied.*		N/A
CC.1	General		N/A
CC.2	Test program 1……..:	--	N/A
CC.3	Test program 2……..:	--	N/A
DD	**ANNEX DD, Requirements for the mounting means of rack-mounted equipment** *Not applied.*		N/A
DD.1	General		N/A
DD.2	Mechanical strength test, variable N……...:	--	N/A
DD.3	Mechanical strength test, 250N, including end stops……:	--	N/A
DD.4	Compliance……:	--	N/A

IEC 60950-1			
Clause	Requirement + Test	Result - Remark	Verdict
EE	**ANNEX EE, Household and home/office document/media shredders** *Not applied.*		N/A
EE.1	General		N/A
EE.2	Markings and instructions		N/A
	Use of markings or symbols……:	--	N/A
	Information of user instructions, maintenance and/or servicing instructions……:	--	N/A
EE.3	Inadvertent reactivation test……:	--	N/A
EE.4	Disconnection of power to hazardous moving parts:		N/A
	Use of markings or symbols……:	--	N/A
EE.5	Protection against hazardous moving parts		N/A
	Test with test finger (Figure 2A) ……:		N/A
	Test with wedge probe (Figure EE1 and EE2) ……:	--	N/A

IEC 60950-1			
Clause	Requirement + Test	Result - Remark	Verdict

1.5.1	TABLE: List of critical components				P
Object/part no.	Manufacturer/ trademark	Type/model	Technical data	Standard	Mark(s) of conformity [1.]
Power Supply Cord for 220 - 240V (Optional)	Harvest Electric Wire And Products Mfg. Co., Ltd.	Plug: HE-104 Cord: H05VV-F Connector: HP-3	250V, 16A 1.0 mm^2 x 3 250V, 10A	DIN VDE 0620-1 DIN VDE 0281-5 HD21.5 S3 IEC/EN60320-1 VDE 0625-1	VDE
Appliance Inlet	Rong Feng Industrial Co., Ltd.	SS-120 Series	250Vac, 10A	EN60320-1 IEC60320-1	VDE NEMKO
Switch					
Main Switch (Optional)	Kennex Technology Ltd. (KTL) or Dongguan Chashan Trendway Electronic Factory	RB-AA-1A33	16A(4), 250Vac 6,000 Cycles	EN61058-1 IEC61058-1	ENEC/NEMKO CB/NEMKO
Right Cover Interlock Switch	HST Co., Ltd.	DE2L	30V dc, 5A, 100,000 Cycles	EN 61058-1 IEC61058-1	ENEC/VDE
Fixing Unit					
Thermal Cutoff	Wako Electronics Co., Ltd.	CS-7TA-35	Two provided. 250Vac, 17A, 202ºC	EN60730-2-9	TUV
Heater Lamp for 220 - 240V	Ushio Inc.	QIRF 240-667/613 MKQJ	240Vac , Main: 667W, Sub: 613W	-	Evaluated together with unit
Fuser Covers, Frames, Guides	E I Dupont De Nemours & Co. Inc.	RE19041 or RE19041A	V-0, Min.1.5mm thick	UL94	UL(E41938)
Fuser Unit – Heater Connector Plug	Japan Solderless Terminal Mfg Co., Ltd.	Type L, series VSL (VSLP-03V-1-(L))	600V, 14A (AWG 16), 10A (AWG 18)	UL1977	UL(E60389)
Connector Receptacle for Fuser Heater	Japan Solderless Terminal Mfg Co., Ltd.	Type L, series VSL (VSLR-03V-L)	600V, 14A (AWG 16)	UL1977	UL(E60389)

IEC 60950-1			
Clause	Requirement + Test	Result - Remark	Verdict

1.5.1	TABLE: List of critical components – continued.				P
Object/part no.	Manufacturer/ trademark	Type/model	Technical data	Standard	Mark(s) of conformity [1.]
Power Source PWB					
Switching Power Supply Unit	Sanken Electric Co., Ltd.	1H645H	Input: AC 220 - 240 V Output: 24V/5.5A	-	Evaluated together with unit
Bleeding Resistors (R151 - R155)	Various	Various	270 kohm, 1/8 W	-	Evaluated together with unit
Varistor (NR151)	EPCOS OHG (EPCOS (Zhuhai FTZ) Co., Ltd.)	SIOV series (SNF14K385E2)	385V	IEC61051 IEC60950-1 Annex Q	VDE
Varistor (NR151), Alternate	Nippon Chemi-Con Corp.	TNR14SE621(K) or TND14SE621(K)	385V	IEC61051	VDE
X - Capacitors (C151, C155)	Okaya Electric Industries Co., Ltd.	LE-MX	310V, 0.22uF X2	EN/IEC60384-14	ENEC(SEMKO)
X - Capacitors (C151, C155), Alternate	Pilkor Electronics Co., Ltd.	PCX2 339	305V/275V, 0.22uF X2	EN/IEC60384-14	ENEC(SEMKO)
Y -Capacitors (C153, C154)	Murata Mfg. Co., Ltd.	KX	250V, 2200pF Y1	EN/IEC60384-14	VDE
Y -Capacitors (C153, C154), Alternate	TDK-EPC Corp.	CD	250V, 2200pF Y1	EN/IEC60384-14	VDE
Bridge Capacitor (C301)	Murata Mfg. Co., Ltd.	KX	250V, 2200pF Y1	EN/IEC60384-14	VDE
Bridge Capacitor (C301), Alternate	TDK-EPC Corp.	CD	250V, 2200pF Y1	EN/IEC60384-14	VDE
Electrolytic Capacitor (C201)	Various	Various	450V, 150uF	-	Evaluated together with unit
Inductor (L151)	Korin Electronics Co., Ltd.	HR-28R-E183	Min. 18.0mH Class A	-	Evaluated together with unit
Inductor (L151), Alternate	Tokyo Parts Industrial Co., Ltd.	1R2A183F28NP	Min. 18.0mH Class A	-	Evaluated together with unit
Inductor (L101)	Sunshine Electronics Co., Ltd.	TC1706	Min. 72uH Class A	-	Evaluated together with unit
Inductor (L101), Alternate	Toho Zinc Co., Ltd.	SK-068KST-38Y(100)	Min. 72uH Class A	-	Evaluated together with unit

IEC 60950-1			
Clause	Requirement + Test	Result - Remark	Verdict

1.5.1	TABLE: List of critical components – continued.					P
Object/part no.	Manufacturer/ trademark	Type/model	Technical data	Standard	Mark(s) of conformity [1.]	
Bridge Rectifier (RC151)	Various	Various	Min. 600V, Min. 4A	-	Evaluated together with unit	
FET (Q201)	Various	Various	Min. 900V, Min. 6A	-	Evaluated together with unit	
Triac (CR101, CR102)	Various	Various	Min. 600 V, Min. 8A	-	Evaluated together with unit	
Photo Coupler (PC101, PC102, PC402)	Everlight Electronics Co., Ltd.	EL816M	Isolation thickness: ≥0.5 mm, Ext. cr.: ≥7.7 mm, Int. cr. : ≥6 mm,	IEC/EN60950-1 IEC/EN60065	SEMKO	
Photo Coupler (PC101, PC102, PC402), Alternate	Renesas Electronics Corp.	PS2561DL1-1	Isolation thickness: > 0.4 mm, Ext. cr.: > 8 mm, Int. cr. = thermal cycling tested (2.10.11), Isolation voltage: min. AC 5000V	IEC/EN60950-1 IEC/EN60065	SEMKO	
Photo Coupler (PC501, PC502)	Everlight Electronics Co., Ltd.	ELT3062M	Isolation thickness: ≥0.5 mm, Ext. cr.: ≥7.7 mm, Int. cr. : ≥6 mm,	IEC/EN60950-1 IEC/EN60065	SEMKO	
Photo Coupler (PC501, PC502), Alternate	Sharp Corp. Electronic Components and Devices Group	3SH21	Isolation thickness: > 0.4 mm, Ext. cr.: > 8 mm, Int. cr. = thermal cycling tested (2.10.11), Isolation voltage: min. AC 5000V	IEC/EN60950-1 IEC/EN60065 IEC/EN60335-1	SEMKO	

IEC 60950-1			
Clause	Requirement + Test	Result - Remark	Verdict

1.5.1	TABLE: List of critical components – continued.				P
Object/part no.	Manufacturer/ trademark	Type/model	Technical data	Standard	Mark(s) of conformity [1.]
Transformer (T401)	GanZhouCity ChaoYue Precision Electronics Co., Ltd.	41-925	Class B (UL System Designation: CY-130A)	UL1446	UL(E352477) Evaluated together with unit
Transformer (T401) - TIW in sec	Ta Ya Electric Wire & Cable Co., Ltd.	TILW-B	Wire Diameter: 0.55 mm	IEC/EN60950-1 IEC/EN60065 UL60950-1/ 60601-1 UL2353	VDE UL(E225803)
Transformer (T401), Alternate	Sanken Electric Co., Ltd.	41-925	Class B (UL System Designation: SANKEN B2)	UL1446	UL(E202036) Evaluated together with unit
Transformer (T401), Alternate - TIW in sec	Furukawa Electric Co., Ltd. or Totoku Electric Co., Ltd.	Tex-E or TIW-2X or TIW-3X (X: Shall be replaced by one to three numbers to indicate conductor size.)	Wire Diameter: 0.55 mm	IEC/EN60950-1 IEC/EN60065 UL60950-1/ 60601-1 UL2353	VDE UL(E206440 or E166483)
Fuse (F101)	Littelfuse	0215 series	250V, T2AH	EN60127-2	SEMKO
Fuse (F101), Alternate	Nippon Seisen Cable Ltd.	FIH	250V, T2AH	EN60127-2	SEMKO
Fuse (F102)	Littelfuse	0215 series	250V, T8AH	EN60127-2	SEMKO
Fuse (F151)	Littelfuse	0215 series	250 V, T6.3AH	EN60127-3	SEMKO
Fuse (F151), Alternate	Nippon Seisen Cable Ltd.	FIH	250 V, T6.3AH	EN60127-2	SEMKO
Relay (RL501)	Tyco Electronics (Shenzhen) Co., Ltd.	SDT-S-124DMR	Contact: 250V, 10A Coil: 24 Vdc	EN61810-1 (TUV) EN61058-1 (SEMKO)	TUV SEMKO
Connector (CN3)	Japan Solderless Terminal Mfg Co.	Type H, series EH	250V, 3A (AWG 22)	UL1977	UL(E60389)
Connector (CN4)	Japan Solderless Terminal Mfg Co.	Type H, series VH	250V, 10A (AWG 16)	DIN VDE 0627/0470 UL1977	TUV UL(E60389)
Printed Wiring Board	Various	Various	Min. V-1 , Min. 105ºC	UL796	UL

IEC 60950-1			
Clause	Requirement + Test	Result - Remark	Verdict

1.5.1	TABLE: List of critical components – continued.				P
Object/part no.	Manufacturer/ trademark	Type/model	Technical data	Standard	Mark(s) of conformity [1.]
High Voltage PWB					
High Voltage Unit	Murata Mfg. Co., Ltd.	MPH7486	Inputs: 24Vdc/ max. 0.3A Outputs: M: max. 3kV, T: max. - 4.8kV, S: max. 5.2kV, DB: max. 2.6kVp-p	-	Evaluated together with unit
High Voltage Unit - Transformer (B51, B101)	Murata Mfg. Co., Ltd.	QU002	Class A	-	Evaluated together with unit
High Voltage Unit - Transformer (B301)	Murata Mfg. Co., Ltd.	WN013	Class A	-	Evaluated together with unit
High Voltage Unit - Transformer (B501)	Murata Mfg. Co., Ltd.	QJ001	Class A	-	Evaluated together with unit
High Voltage Unit - Transformer (B701)	Murata Mfg. Co., Ltd.	QJ002	Class A	-	Evaluated together with unit
Printed Wiring Board	Various	Various	Min. V-1 , Min. 105ºC	UL796	UL

IEC 60950-1			
Clause	Requirement + Test	Result - Remark	Verdict

1.5.1	TABLE: List of critical components – continued.				P
Object/part no.	Manufacturer/ trademark	Type/model	Technical data	Standard	Mark(s) of conformity [1.]
Fan Motor, Motor, Clutch, Solenoid					
Cooling Fan	Nidec Corp.	D08K-24TU 83 (AX)	24Vdc, 0.077A max.	-	Evaluated together with unit
Drive Motor	Minebea Motor Manufacturing Corp.	DNQ06K10L13F	24Vdc, 1.3A max. Brushless Motor	-	Evaluated together with unit
ISU Motor	NMB Mechatronics Co., Ltd.	ST35B-9610-A	Stepper type, 24Vdc, 400mA (Peak)	-	Evaluated together with unit
Eject Motor	Minebea Motor Manufacturing Corp.	PM42M-048-MIL1	Stepper type, 24Vdc, 400mA (Peak)	-	Evaluated together with unit
Hopper Motor	Standard Motor Co., Ltd.	RC370-KT-081000	24Vdc, 110mA max.	-	Evaluated together with unit
Polygon Motor	Minebea Motor Manufacturing Corp.	MASQ5EF4LK	24Vdc, 0.6A max. Brushless Motor	-	Evaluated together with unit
Drive Clutches	Daiken Co., Ltd. or Sinfonia Microtec Co., Ltd.	MCA-50T	Two provided. 24Vdc, 0.104A	-	Evaluated together with unit
MPF Solenoid	TDS Co., Ltd.	TDS-F06A-18	24Vdc, 300mA max.	-	Evaluated together with unit
Laser Diode	QSI Co., Ltd.	QL78F6SA-K	Class 3B, Wavelength: 788nm, Output Power: 10mW	-	Evaluated together with unit
Scanner LED	Canon Components Inc.	HE06G-W05	3.3Vdc max. Classified as Exempt Group	IEC/EN62471	Evaluated together with unit
Cassette Heater (Optional)	Kurabe Industrial Co., Ltd.	302KK4507	240V, 7W	-	Evaluated together with unit
Cassette Heater (Optional) - Thermal Fuses (Optional)	Therm-O-Disc (Emerson Japan Ltd.)	E4A50167C	Two provided. 250V, 10A, 167°C	EN 60691	VDE
Lithium Battery (BAT2001) on Main PWB	Various	CR2032	3 V; max. 10mA reverse charging current. Protected by a diode and a 1 kohm resistor.	UL1642	UL(MH12566)

IEC 60950-1			
Clause	Requirement + Test	Result - Remark	Verdict

1.5.1	TABLE: List of critical components – continued.				P
Object/part no.	Manufacturer/ trademark	Type/model	Technical data	Standard	Mark(s) of conformity [1.]
Fuse (YF2002) on Main PWB for Scanner LED and Operation Panel	Skygate Co., Ltd.	1206FT	32Vdc, 1A	UL248-1/ UL248-14	UL(E195833)
Fuse (YF7) on Main PWB for 24V to DP-480	Skygate Co., Ltd.	1206FT	32Vdc, 3A	UL248-1/ UL248-14	UL(E195833)
Enclosure Fax Board Lid (Optional), WIFI Lids (Optional)	Various	Various	Steel, min. 0.6 mm thick.	-	Evaluated together with unit
Enclosure Network Board Lid (Optional), Rear PWB Shield, Deck Connector Shield	Various	Various	Steel, min. 0.5 mm thick.	-	Evaluated together with unit
Enclosure Right Middle Cover	Bayer MaterialScience	FR3006 HF	5VB, Min. 2.9 mm thick	UL94	UL(E41613)
Enclosure Front Cover	Teijin Chemicals Ltd., Research & Development Div.	TN-9500	5VB, Min. 2.4 mm thick	UL94	UL(E98529)
Enclosure Right Tray, Exit Front Cover, Front Right Cover, Rear Cover	Teijin Chemicals Ltd., Research & Development Div.	TN-9500	5VB, Min. 1.9 mm thick	UL94	UL(E98529)
Enclosure MPF Base	Bayer MaterialScience	FR3006 HF	5VB, Min. 1.9 mm thick	UL94	UL(E41613)
Enclosure Exit Rear Cover, Middle Rear Cover	Teijin Chemicals Ltd., Research & Development Div.	TN-9500	5VB, Min. 1.6 mm thick	UL94	UL(E98529)
Enclosure Exit Upper Cover	Teijin Chemicals Ltd., Research & Development Div.	TN-9500	5VB, Min. 1.5 mm thick	UL94	UL(E98529)

IEC 60950-1			
Clause	Requirement + Test	Result - Remark	Verdict

1.5.1	TABLE: List of critical components – continued.				P
Object/part no.	Manufacturer/ trademark	Type/model	Technical data	Standard	Mark(s) of conformity [1.]
Left Tray, Front Left Cover, Rear PWB Cover, Right Middle Cover Handle, Left Inner Cover, Left Cover, Right Upper Cover, Right Rear Cover, Right Front Cover, ISU Bottom Frame, ISU Top Frame, Left Indicator, DP Connector Cover, Operation Base Cover (Optional), Fax Operation Cover (Optional), Operation Cover, Panel Cover, MPF Cover, MPF Table, Table MPF Base, MPF Front Cursor, MPF Rear Cursor, MPF Sub Table A, MPF Sub Table B, MPF Sub Table C	Various	Various	Min. HB75	UL94	UL
Connector Receptacle for Model PF-480	Molex Inc.	5557	600V max., 9A max.	UL1977	UL(E29179)
Connector Plug for Cassette Heater	Molex Inc.	5559	600V max., 9A max.	UL1977	UL(E29179)
Printed Wiring Board	Various	Various	Min. V-1, min. 105°C	UL796	UL

IEC 60950-1			
Clause	Requirement + Test	Result - Remark	Verdict

1.5.1	TABLE: List of critical components – continued.				P
Object/part no.	Manufacturer/ trademark	Type/model	Technical data	Standard	Mark(s) of conformity [1.]
Document Feeder, Model DP-480 (Option)					
Feed Motor	Minebea Motor Manufacturing Corp.	PM42L-048-MIN4	Stepper type Two provided 24Vdc, 600mA (Peak)	-	Evaluated together with unit
Junction Motor	Minebea Motor Manufacturing Corp.	PM35L-048-MIM2	Stepper type, 24Vdc, 700mA (Peak)	-	Evaluated together with unit
Clutch	Daiken Co., Ltd. or Sinfonia Microtec Co., Ltd.	MCA-50T	24Vdc, 0.104A	-	Evaluated together with unit
Interlock Switch	Omron Corp.	D3V-16506-3C25 (10E)	40Vdc/5A, 30Vdc/10A 50,000 Cycles	EN61058-1	ENEC/VDE
Base, Front Cover, Rear Cover, PF Cover, Left Cover, Main Table, Table Cover, Table Rack, Front Cursor, Rear Cursor, Eject Stopper, Rear Cover Lid	Various	Various	Min. HB75	UL94	UL
Printed Wiring Board	Various	Various	Min. V-1, min. 105°C	UL796	UL

IEC 60950-1			
Clause	Requirement + Test	Result - Remark	Verdict

1.5.1	TABLE: List of critical components – continued.				P
Object/part no.	Manufacturer/ trademark	Type/model	Technical data	Standard	Mark(s) of conformity [1.]
Cassette Feeding Unit, Model PF-480 (Option)					
Feed Motor	Minebea Motor Manufacturing Corp.	PM42L-048-MIN4	Stepper type 24Vdc, 600mA (Peak)	-	Evaluated together with unit
Feed Clutch	Daiken Co., Ltd. or Sinfonia Microtec Co., Ltd.	MCA-50T	24Vdc, 0.104A	-	Evaluated together with unit
Cassette Heater (Optional)	Kurabe Industrial Co., Ltd.	302KK4507	240V, 7W	-	Evaluated together with unit
Cassette Heater (Optional) - Thermal Fuses (Optional)	Therm-O-Disc (Emerson Japan Ltd.)	E4A50167C	Two provided. 250V, 10A, 167ºC	EN 60691	VDE
Connector Plug for Main Unit	Molex Inc.	5559	600V max., 9A max.	UL1977	UL(E29179)
Connector Plug for Cassette Heater	Molex Inc.	5559	600V max., 9A max.	UL1977	UL(E29179)
Connector Receptacle for next Model PF-480	Molex Inc.	5557	600V max., 9A max.	UL1977	UL(E29179)
Enclosure Rear Cover, Connector Cover	Teijin Chemicals Ltd., Research & Development Div.	TN-9500	5VB, Min. 2.0 mm thick	UL94	UL(E98529)
Enclosure Frame Base	Bayer MaterialScience	FR3006 HF	5VB, Min. 2.4 mm thick	UL94	UL(E41613)
Cassette, Right Feed Cover, Top Cover	Various	Various	Min. HB75	UL94	UL
Printed Wiring Board	Various	Various	Min. V-1, min. 105ºC	UL796	UL

IEC 60950-1			
Clause	Requirement + Test	Result - Remark	Verdict

1.5.1	TABLE: List of critical components – continued.				P
Object/part no.	Manufacturer/ trademark	Type/model	Technical data	Standard	Mark(s) of conformity [1.]
Fax Kit, Model Fax System (X) (Option) for Model TASKalfa 1801 and TASKalfa 2201					
Fax PWB	Ricoh	H702500XX or F9010200X (X may be any number or alphabetical number or blank)	--	--	--
Surge Absorber (V2)	STMicroelectronics	SMP100LC-230	230V	UL497B	UL (E136224)
Alternate Surge Absorber (V2)	STMicroelectronics	SMP100LC-270	270V	UL497B	UL (E136224)
Varistor (V3,V4), Optional	Nippon Chemi-con	TND09V-431K	430V	UL1449 UL1414	UL(E323623) UL(E65426)
Surge Absorbers (A1, A2), Optional	Okaya Electric Industries Co., Ltd.	RA-102MS-V7	1000V	UL1449	UL(E322107)
Capacitors (C32, C33)	Murata Mfg. Co., Ltd.	KY	250V or 300V, 680pF, Y2 type	IEC/EN60384-14	VDE
Capacitor (C41)	Murata Mfg. Co., Ltd.	GF	250V, 33pF, Y2 type	EN/IEC60384-14	SEMKO
Capacitors (C18, C21)	Murata Mfg. Co., Ltd.	KX	250V or 300V, 33pF, Y1 type	EN/IEC60384-14	VDE
Modular Jacks (CN1,CN2)	JST Mfg. Co., Ltd.	MJ-62J-RD	Type RJ-11	UL1863	UL(E174260)
Relay (RY1)	Fujitsu Component Ltd.	FTR-C1	Contact : 30V dc, 1.0A, Coil : 3V dc	IEC/EN 60950-1	BSI

IEC 60950-1			
Clause	Requirement + Test	Result - Remark	Verdict

1.5.1	TABLE: List of critical components – continued.				P
Object/part no.	Manufacturer/ trademark	Type/model	Technical data	Standard	Mark(s) of conformity [1.]
Photo Coupler (PC1)	Toshiba Corp., Semiconductor Co. Discrete Semiconductor Div.	TLP620 or TLP627 or TLP621	Ext. cr.: > 7 mm, Int. cr. = thermal cycling tested (2.10.11), Isolation voltage: min. AC 5000V	IEC 60950-1	BSI
Alternate Photo Coupler (PC1)	Toshiba Corp., Semiconductor Co. Discrete Semiconductor Div.	TLP320 or TLP629	Ext. cr.: > 6.4 mm, Int. cr. = thermal cycling tested (2.10.11), Isolation voltage: min. AC 5000V	IEC 60950-1	BSI
Alternate Photo Coupler (PC1)	Toshiba Corp., Semiconductor Co. Discrete Semiconductor Div.	TLP181	Ext. cr.: > 4 mm, Int. cr. = thermal cycling tested (2.10.11), Isolation voltage: min. AC 3750V	IEC 60950-1	BSI
Alternate Photo Coupler (PC1)	NEC Corp. or NEC Electronics Corp Compound Semiconductor Device Div. or Renesas Electronics Corp.	PS2501 or PS2505	Ext. cr.: > 7 mm, Int. cr. = 3.5mm	UL1577	UL (E72422)
Alternate Photo Coupler (PC1)	NEC Corp. or NEC Electronics Corp Compound Semiconductor Device Div. or Renesas Electronics Corp.	PS2532 or PS2533 or PS2565	Ext. cr.: > 7 mm, Int. cr. = 4mm	IEC/EN 60950-1	SEMKO
Alternate Photo Coupler (PC1)	NEC Corp. or NEC Electronics Corp Compound Semiconductor Device Div. or Renesas Electronics Corp.	PS2701	Ext. cr.: > 5 mm, Int. cr. = 2.5mm	UL1577	UL (E72422)
PWB	Various	Various	94V-1 or better	UL796	UL

IEC 60950-1			
Clause	Requirement + Test	Result - Remark	Verdict

1.5.1	TABLE: List of critical components – continued.					P
Object/part no.	Manufacturer/ trademark	Type/model	Technical data	Standard	Mark(s) of conformity [1.]	
Printer NIC (Option) for Model TASKalfa 1801 and TASKalfa 2201						
PWB	Various	Various	94V-1 or better	UL 94	UL	
HEATER BRANCH PWB						
PWB	Various	Various	94V-1 or better	UL 94	UL	
Supplementary information: [1)] Provided evidence ensures the agreed level of compliance. See OD-CB2039.						

1.5.1	TABLE: Opto Electronic Devices	P
Manufacturer ..... : --		
Type..... : --		
Separately tested ..... : --		
Bridging insulation ..... : --		
External creepage distance..... : --		
Internal creepage distance ..... : --		
Distance through insulation ..... : --		
Tested under the following conditions..... : --		
Input..... : --		
Output..... : --		
supplementary information		
See appended table 1.5.1 for details		

IEC 60950-1			
Clause	Requirement + Test	Result - Remark	Verdict

1.6.2	TABLE: Electrical data (in normal conditions)						P
U (V)	I (A)	Irated (A)	P (W)	Fuse #	Ifuse (A)	Condition/status	
198V/50Hz	5.5	--		F101/F102/F151	0.1/5.1/0.5	M.N.L 1 / Warm up	
198V/50Hz	5.5	--	1073	F101/F102/F151	0.1/5.1/0.5	M.N.L 1 / Warm up	
220V/50Hz	5.9	6.3A	1253	F101/F102/F151	0.1/5.3/0.5	M.N.L 1 / Warm up	
240V/50Hz	6.1	6.3A	1441	F101/F102/F151	0.1/5.6/0.5	M.N.L 1 / Warm up	
264V/50Hz	6.3	--	1645	F101/F102/F151	0.1/5.9/0.5	M.N.L 1 / Warm up	
198V/60Hz	5.5	--	1062	F101/F102/F151	0.1/5.0/0.5	M.N.L 1 / Warm up	
220V/60Hz	5.9	6.3A	1245	F101/F102/F151	0.1/5.3/0.5	M.N.L 1 / Warm up	
240V/60Hz	6.1	6.3A	1438	F101/F102/F151	0.1/5.6/0.5	M.N.L 1 / Warm up	
264V/60Hz	6.3	--	1652	F101/F102/F151	0.1/5.9/0.5	M.N.L 1 / Warm up	
220V/50Hz	5.9	6.3A	1259	F101/F102/F151	0.1/5.2/0.5	M.N.L 2/ Warm up	
240V/50Hz	6.0	6.3A	1430	F101/F102/F151	0.1/5.3/0.5	M.N.L 2 / Warm up	
220V/60Hz	5.9	6.3A	1249	F101/F102/F151	0.1/5.3/0.5	M.N.L 2 / Warm up	
240V/60Hz	6.1	6.3A	1454	F101/F102/F151	0.1/5.5/0.5	M.N.L 2 / Warm up	
198V/50Hz	3.2	--	629	F101/F102/F151	0.1/2.5/0.6	M.N.L 1 / Copy mode	
220V/50Hz	3.1	6.3A	672	F101/F102/F151	0.1/2.7/0.5	M.N.L 1 / Copy mode	
240V/50Hz	3.2	6.3A	756	F101/F102/F151	0.1/2.8/0.5	M.N.L 1 / Copy mode	
264V/50Hz	3.5	--	920	F101/F102/F151	0.1/3.1/0.5	M.N.L 1 / Copy mode	
198V/60Hz	3.2	--	624	F101/F102/F151	0.1/2.5/0.6	M.N.L 1 / Copy mode	
220V/60Hz	3.1	6.3A	665	F101/F102/F151	0.1/2.6/0.5	M.N.L 1 / Copy mode	
240V/60Hz	3.2	6.3A	754	F101/F102/F151	0.1/2.8/0.5	M.N.L 1 / Copy mode	
264V/60Hz	3.5	--	918	F101/F102/F151	0.1/3.1/0.5	M.N.L 1 / Copy mode	

Supplementary information:
M.N.L 1: Model TASKalfa 2201 with DP-480, three of PF-480 and Fax System (X)

M.N.L 2: Model TASKalfa 2201 with DP-480, three of PF-480 and Fax System (X). T401 on SWPS: Sanken Electric Co., Ltd., Type 41-925

IEC 60950-1			
Clause	Requirement + Test	Result - Remark	Verdict

2.1.1.5 c) 1)	TABLE: max. V, A, VA test				P
Voltage (rated) (V)	Current (rated) (A)	Voltage (max.) (V)	Current (max.) (A)	VA (max.) (VA)	
24V output (*)	5.5	24.1	10.5	251	
supplementary information:					
*: Reference only. Not accessible to operator.					

2.1.1.5 c) 2)	TABLE: stored energy		N/A
Capacitance C (µF)	Voltage U (V)	Energy E (J)	
--	--	--	
supplementary information:			
None			

IEC 60950-1			
Clause	Requirement + Test	Result - Remark	Verdict

2.2	TABLE: evaluation of voltage limiting components in SELV circuits			P
Component (measured between)		max. voltage (V) (normal operation)		Voltage Limiting Components
		V peak	V d.c.	
264V, 50Hz				
Switching Power Supply Unit, Model ETX1KC889ME				
T401	Pin 14 to Pin 8 (GND)	44.4	--	--
T401	Cathode of RC401 to Pin 8 (GND)	--	29.2	RC401
24Vdc				
High Voltage Unit,				
B101	pin 7 to CN1 pin 10 (GND)	2.12k	--	--
B101	pin 1 to CN1 pin 10 (GND)	--	25.1	B101
B301	pin 5 to CN1 pin 10 (GND)	1.58k	--	--
B301	pin 2 to CN1 pin 10 (GND)	28.8	--	B301
Fault test performed on voltage limiting components		Voltage measured (V) in SELV circuits (V peak or V d.c.)		
264V, 50Hz				
Switching Power Supply Unit				
24V output	(RC401 shorted.)	28.0Vdc (Output shut down in 0.1 sec after RC401 shorted.)		
24Vdc				
High Voltage Unit				
24V input	(B101 input - output shorted.)	27.6Vdc (Output M shut down in 0.1 sec after B101 shorted.)		
24V input	(B301 input - output shorted.)	27.6Vdc (Output B shut down in 0.1 sec after B301 shorted.)		
Supplementary information: None				

IEC 60950-1			
Clause	Requirement + Test	Result - Remark	Verdict

2.4.2	TABLE: Limited current circuit measurement					P
Location	Voltage (V)	Current (mA)	Freq. (kHz)	Limit (mA)	Comments	
Switching Power Supply Unit (Input 240V)						
C301 (No fault)	352Vpk	0.17mA	--	0.7mA	Measured by Annex D	
C301 (C211 short)	--	0.16mA	--	0.7mA	Measured by Annex D	
High Voltage Unit (Input 24Vdc)						
Output M (No fault)	2.10kVdc	0.28mA	--	0.7mA	Measured by Annex D	
Output M (Q1 B Open)	2.10kVdc	1.3mA	--	0.7mA	Measured by Annex D Not complied with LCC. SELV test and Abnormal test conducted.	
Output T (No fault)	4.12kVdc	0.05mA	--	0.7mA	Measured by Annex D	
Output T(R535 short)	4.12kVdc	0.05mA	--	0.7mA	Measured by Annex D	
Output B (No fault)	1.31kVpk	0.34mA	2.7kHz	0.7mA	Measured by Annex D	
Output B (Q1 B Open)	1.31kVpk	1.35mA	2.7kHz	0.7mA	Measured by Annex D Not complied with LCC. SELV test and Abnormal test conducted.	
Output S (No fault)	560Vdc	0.007mA	--	0.7mA	Measured by Annex D	
Output S (Q702 B open)	560Vdc	0.015mA	--	0.7mA	Measured by Annex D	
Supplementary information: None						

IEC 60950-1			
Clause	Requirement + Test	Result - Remark	Verdict

2.5	TABLE: limited power sources				P
Circuit output tested:					
Measured Uoc (V) with all load circuits disconnected:	--				
	I_{sc} (A)		VA		
	Meas.	Limit	Meas.	Limit	
Output for DP Unit					
Protected by Fuse YF7 on Main PWB, 3A					
According to Table 2C	7.5	200	174	250	
Output for Scanner LED					
Protected by Fuse YF2002 on Main PWB, 1A					
According to Table 2C	0.5	200	9	250	
Operation Panel					
Protected by Fuse YF2002 on Main PWB, 1A					
According to Table 2C	7.5	200	173	250	
supplementary information:					
none					

2.6.3.4	TABLE: Resistance of earthing measurement		P
Location	Resistance measured (Ω)	Comments	
Inlet – Case of Cassette Heater on PF-480	0.020	--	
Inlet – Screw of Fuser	0.012		
Supplementary information: Tested current 40A for 2 minutes.			

IEC 60950-1			
Clause	Requirement + Test	Result - Remark	Verdict

2.10.2	Table: working voltage measurement			P
Location		RMS voltage (V)	Peak voltage (V)	Comments
T401 pin 1 – pin 8		212	364	50.00 Hz
T401 pin 1 – pin 14		215	404	98.40 Hz
T401 pin 3 – pin 8		327	652	848.2 Hz
T401 pin 3 – pin 14		308	628	908.0 Hz
T401 pin 6 – pin 8		204	380	49.90 Hz
T401 pin 6 – pin 14		203	360	49.91 Hz
T401 pin 7 – pin 8		203	352	49.91 Hz
T401 pin 7 – pin 14		207	380	96.93 Hz
D209 Anode – T401 pin 8		344	656	429.6 Hz
D209 Anode – T401 pin 14		339	636	345.8 Hz
D209 Cathode – T401 pin 8		411	648	49.83 Hz
D209 Cathode – T401 pin 14		411	632	50.08 Hz
Supplementary information: 240V, 50Hz				

IEC 60950-1			
Clause	Requirement + Test	Result - Remark	Verdict

2.10.3 and 2.10.4	TABLE: Clearance and creepage distance measurements					P
Clearance (cl) and creepage distance (cr) at/of/between:	U peak (V)	U r.m.s. (V)	Required cl (mm)	cl (mm)	Required cr (mm)	cr (mm)
Power Source PWB-PCB (pri, gnd, sec)						
Functional:						
Pri - pri (before fuse)	< 420	< 250	1.9	3.0	2.5	3.0
Basic / supplementary:						
Pri – gnd (traces at C153, C154)	< 420	< 250	2.5	6.4	2.5	6.4
Pri – gnd (chassis)	< 420	< 250	2.5	4.2	2.5	4.2
Reinforced:						
Pri – sec (traces at RL501)	< 420	< 250	4.9	10.0	5.0	10.0
Pri – sec (traces at PC101, PC102, PC402, PC501, PC502)	< 420	< 250	4.9	8.1	5.0	8.1
Pri – sec (traces at under T401)	652	327	5.9	8.1	6.6	8.1
Pri – sec (traces at C301)	< 420	< 250	4.9	8.1	5.0	8.1
Pri – sec (traces at D209 Anode – T401 pin 8)	656	344	5.9	8.1	6.9	9.0
Pri – sec (traces at D209 Cathode – T401 pin 14)	632	411	5.6	8.1	8.3	9.0

IEC 60950-1			
Clause	Requirement + Test	Result - Remark	Verdict

2.10.3 and 2.10.4	TABLE: Clearance and creepage distance measurements – continued.					P
Clearance (cl) and creepage distance (cr) at/of/between:	U peak (V)	U r.m.s. (V)	Required cl (mm)	cl (mm)	Required cr (mm)	cr (mm)
Transformer T401 on Power Source PWB Manufacture : GanZhoucity						
Basic / supplementary:						
Pri – core [1]) (external)	--	--	--	3.1	--	3.1
Pri – core [1]) (internal)	--	--	--	0	--	0
Sec – core [1]) (external)	--	--	--	16.2	--	16.2
Sec – core [1]) (internal)	--	--	--	--[2])	--	--[2])
Reinforced:						
Pri – core – sec	656	411	5.9	19.3	8.3	19.3

[1]) Core is Primary.
[2]) Secondary wire is Triple Insulation wire.
Concentric pri windings and sec windings on a bobbin. Winding ends are internally fixed with tapes, they are soldered on pins.
Bobbin: Type PM-9820; Sumitomo Bakelite Co., Ltd.; Phenolic,
V-0, min. 0.75mm thick
Case: Type FR530; EI Dupont Denemours & Co inc; PBT
V-0, min. 0.55mm thick

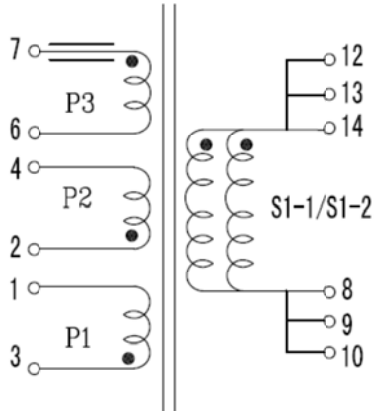

Distances from core to any pri- component: dcl: min. 7.0mm, dcr: min. 7.0mm

IEC 60950-1			
Clause	Requirement + Test	Result - Remark	Verdict

2.10.3 and 2.10.4	TABLE: Clearance and creepage distance measurements – continued.					P
Clearance (cl) and creepage distance (cr) at/of/between:	U peak (V)	U r.m.s. (V)	Required cl (mm)	cl (mm)	Required cr (mm)	cr (mm)
Transformer T401 (alternate) on Power Source PWB Manufacture : Sanken						
Basic / supplementary:						
Pri – core [1]) (external)	--	--	--	2.0	--	2.0
Pri – core [1]) (internal)	--	--	--	0	--	0
Sec – core [1]) (external)	--	--	--	16.2	--	16.2
Sec – core [1]) (internal)	--	--	--	--[2])	--	--[2])
Reinforced:						
Pri – core – sec	656	411	5.9	18.2	8.3	18.2

[1]) Core is Primary.
[2]) Secondary wire is Triple Insulation wire.
Concentric pri windings and sec windings on a bobbin. Winding ends are internally fixed with tapes, they are soldered on pins.
Bobbin: Type PM-9820, PM-9750, PM-9720, PM-9630; Sumitomo Bakelite Co., Ltd.; Phenolic, V-0, min. 0.75mm thick
Case: Type FR530; EI Dupont Denemours & Co inc; PBT
Type 1494; Toray Industries Inc.; PBT
V-0, min. 0.55mm thick

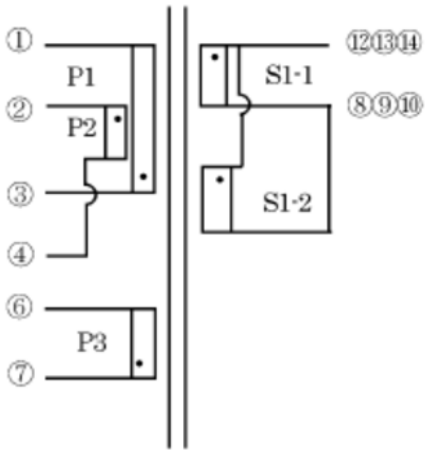

Distances from core to any pri- component: dcl: min. 7.0mm, dcr: min. 7.0mm

IEC 60950-1			
Clause	Requirement + Test	Result - Remark	Verdict

2.10.3 and 2.10.4	TABLE: Clearance and creepage distance measurements – continued.					P
Clearance (cl) and creepage distance (cr) at/of/between:	U peak (V)	U r.m.s. (V)	Required cl (mm)	cl (mm)	Required cr (mm)	cr (mm)
Interlock system (PCB traces)						
Basic / supplementary:						
Before interlock switch – after interlock switch	DC 24	DC 24	1.3	1.3	1.3*	1.3
	* Required creepage was 0.5mm, however, 1.3mm was taken from required clearance.					
Fixing Unit						
Reinforced:						
a) Thermal Cutoff (Heater Roller): pri – cap *)	--	--	--	3.85	--	5.0
b) Thermal Cutoff (Heater Roller) cap – Heater Roller **)	--	--	--	1.05	--	119
c) Thermistor (Heater Roller) **) (sec) – Heater Roller	--	--	--	0.0	--	0.0
a)+b)+c)	<420	<250	4.9	4.9	5.0	124
*) Cap of Thermal Cutoff is floating. **) Thermal Cutoff and Heater Roller are covered with a thin film and insulating coating respectively, but they are not considered as insulation. ***) Thermistor is contacted to Heater Roller.						
HEATER BRANCH PWB (pri, gnd, sec)						
Basic / supplementary:						
Pri – gnd (chassis)	< 420	< 250	2.2	31.0	2.5	31.0

IEC 60950-1			
Clause	Requirement + Test	Result - Remark	Verdict

2.10.3 and 2.10.4	TABLE: Clearance and creepage distance measurements – continued.					P
Clearance (cl) and creepage distance (cr) at/of/between:	U peak (V)	U r.m.s. (V)	Required cl (mm)	cl (mm)	Required cr (mm)	cr (mm)
Fax Kit, Model Fax System (X)						
Basic / supplementary:						
TNV - chassis	120	71	1.3	2.5	1.5	2.7
TNV – gnd (traces at C32, C33)	120	71	1.3	2.8	1.5	2.8
TNV – gnd (traces at A1, A2)	120	71	1.3	3.2	1.5	3.2
TNV– SELV (traces at C18, C21)	120	71	1.3	2.6	1.5	2.6
TNV – SELV (traces at relay pattern)	120	71	1.3	2.7	1.5	2.7
Supplementary information: Each required clearance has been multiplied by the altitude correction factor 1.215 for 3500m.						

2.10.5	TABLE: Distance through insulation measurements				P
Distance through insulation (DTI) at/of:	U peak (V)	U rms (V)	Test voltage (V)	Required DTI (mm)	DTI (mm)
Reinforced:					
Core Case of Transformer T401 on SWPS, Type FR530	656	411	3000	0.4	0.5
Core Case of Transformer T401 on SWPS Type 1494	656	411	3000	0.4	0.5
Supplementary information:					

IEC 60950-1			
Clause	Requirement + Test	Result - Remark	Verdict

4.3.8	TABLE: Batteries									N/A
The tests of 4.3.8 are applicable only when appropriate battery data is not available										N/A
Is it possible to install the battery in a reverse polarity position?										N/A
	Non-rechargeable batteries			Rechargeable batteries						
	Discharging		Un-intentional charging	Charging		Discharging		Reversed charging		
	Meas. current	Manuf. Specs.		Meas. current	Manuf. Specs.	Meas. current	Manuf. Specs.	Meas. current	Manuf. Specs.	
Max. current during normal condition										
Max. current during fault condition										
Test results:										Verdict
- Chemical leaks										
- Explosion of the battery										
- Emission of flame or expulsion of molten metal										
- Electric strength tests of equipment after completion of tests										
Supplementary information:										

IEC 60950-1			
Clause	Requirement + Test	Result - Remark	Verdict

4.3.8	TABLE: Batteries	P
Battery category ..... :	Lithium	
Manufacturer ..... :	Sony Energy Devices Corp	
Type / model..... :	CR2032	
Voltage ..... :	3V	
Capacity..... :	220mAh	
Tested and Certified by (incl. Ref. No.)..... :	UL	
Circuit protection diagram:	See below.	

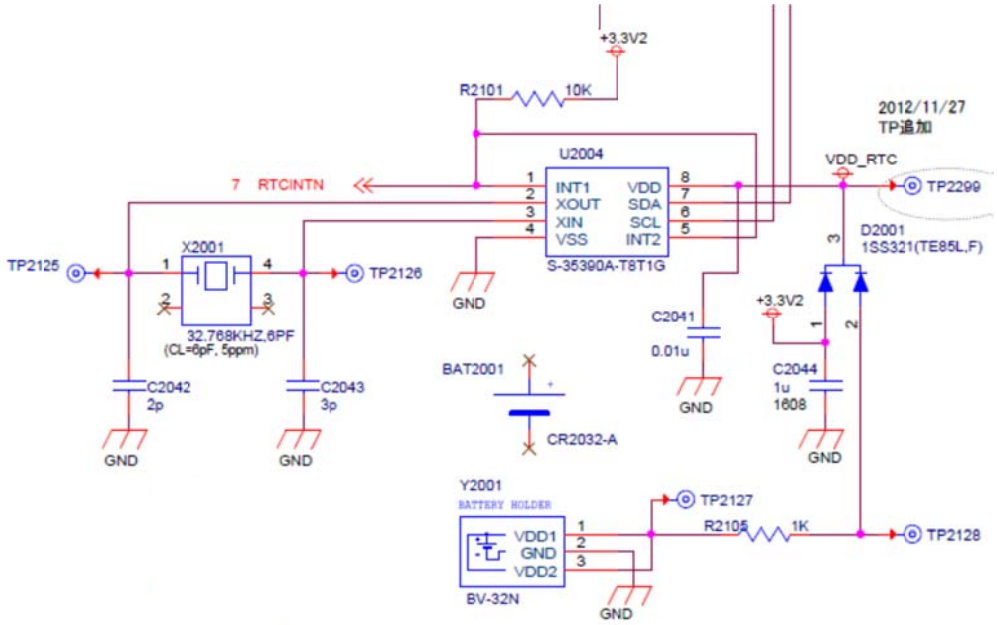

MARKINGS AND INSTRUCTIONS (1.7.12, 1.7.15)	
Location of replaceable battery	On the Main PWB.
Language(s) ……..:	English
Close to the battery ……..:	--
In the servicing instructions ……:	RISK OF EXPLOSION IF BATTERY IS REPLACED BY AN INCORRECT TYPE. DISPOSE OF USED BATTERIES ACCORDING TO THE INSTRUCTIONS.
In the operating instructions ……..:	--

IEC 60950-1			
Clause	Requirement + Test	Result - Remark	Verdict

4.5	TABLE: Temperature rise measurements					P
Temperatures were measured according cl. 1.4.5. Test in condition A and B at continuous normal operation as for power input measurements of table 1.6 resulted in highest temperature values. Temperatures are calculated according cl. 1.4.12.3 with regard to the maximum ambient operation temperature of 35°C(Tma), as specified by the manufacturer.						
test voltage(s) (V):			A: 198V, 50Hz, standby		B: 242V, 50Hz, standby	
t_{amb1} (°C):	A: -- B: --		t_{amb2} (°C):		A: 23 B: 24	
Temperature of part/at: (measured with thermocouples)	Measured temperature at T_{amb}		Calculated temperature at T_{ma}		Allowed T_{max} (°C)	
	A T (°C)	B T (°C)	A T (°C)	B T (°C)		
SWPS T401 coil	43	43	55	54	110	
SWPS T401 core	41	42	53	53	110	
SWPS L101 coil	31	33	43	44	90	
SWPS L151 coil	28	29	40	40	90	
SWPS L801 coil	38	39	50	50	90	
SWPS RC151 body	33	34	45	45	105	
SWPS RC401 body	41	42	53	53	105	
SWPS Q201 body	38	41	50	52	105	
SWPS C201 body	31	33	43	44	105	
SWPS RL501 body	42	43	54	54	105	
SWPS PC402 body	34	37	46	48	105	
SWPS NR151 body	27	29	39	40	105	
SWPS CR101 body	31	32	43	43	105	
SWPS CN3 body	26	28	38	39	105	
SWPS CN4 body	27	28	39	39	105	
HVU B51 coil	29	31	41	42	90	
HVU B101 coil	31	33	43	44	90	
HVU B301 coil	28	30	40	41	90	
HVU B501 coil	30	32	42	43	90	
HVU B701 coil	33	35	45	46	90	
Fax System (X) L001	28	30	40	41	90	
Inlet Body	26	27	38	38	--	
Cooling Fan	26	28	38	39	100	
Drive Motor	32	34	44	45	100	
ISU Motor	73	75	85	86	100	

IEC 60950-1			
Clause	Requirement + Test	Result - Remark	Verdict

4.5	TABLE: Temperature rise measurements – continued.				P
Temperature of part/at: (measured with thermocouples)	Measured temperature at T_{amb}		Calculated temperature at T_{ma}		Allowed T_{max} (°C)
	A T (°C)	B T (°C)	A T (°C)	B T (°C)	
Eject Motor	45	47	57	58	100
Hopper Motor	29	31	41	42	100
Polygon Motor	33	35	45	46	100
Drive Clutch	26	27	38	38	90
MPF Solenoid	25	27	37	38	90
Fuser Unit, Primary Wire	72	75	84	86	--
Fuser Unit, Secondary Wire	83	85	95	96	--
Fuser Connector	45	47	57	58	--
Fuser Cover	79	81	91	92	--
Cassette Heater Body	41	50	53	61	--
Plastic Enclosure	47	48	59	59	95
Metal Enclosure	31	33	43	44	70
Feed Motor (DP-480) (Left)	25	27	37	38	100
Feed Motor (DP-480) (Center)	27	28	39	39	100
Junction Motor (DP-480)	27	28	39	39	100
Clutch (DP-480)	25	27	37	38	90
Plastic Enclosure (DP-480)	25	27	37	38	95
Feed Motor (PF-480)	24	25	36	36	100
Feed Clutch (PF-480)	24	25	36	36	90
Cassette Heater Body (PF-480)	53	65	65	76	--
Plastic Enclosure (PF-480)	24	25	36	36	95
Supplementary information: Measured on Model TASKalfa 2201 with DP-480, three of PF-480 and Fax System (X).					
Temperatures measured with winding resistance method: Not used.					

IEC 60950-1			
Clause	Requirement + Test	Result - Remark	Verdict

4.5	TABLE: Temperature rise measurements	P

Temperatures were measured according cl. 1.4.5. Test in condition C and D at continuous normal operation as for power input measurements of table 1.6 resulted in highest temperature values.
Temperatures are calculated according cl. 1.4.12.3 with regard to the maximum ambient operation temperature of 35°C(Tma), as specified by the manufacturer.

test voltage(s) (V):		C: 264V, 60Hz, standby	D: 198V, 50Hz, copying
t_{amb1} (°C):	C: -- D: --	t_{amb2} (°C):	C: 24 D: 25

Temperature of part/at: (measured with thermocouples)	Measured temperature at T_{amb}		Calculated temperature at T_{ma}		Allowed T_{max} (°C)
	C T (°C)	D T (°C)	C T (°C)	D T (°C)	
SWPS T401 coil	43	48	54	58	110
SWPS T401 core	43	43	54	53	110
SWPS L101 coil	33	35	44	45	90
SWPS L151 coil	30	36	41	46	90
SWPS L801 coil	40	37	51	47	90
SWPS RC151 body	33	43	44	53	105
SWPS RC401 body	44	46	55	56	105
SWPS Q201 body	43	45	54	55	105
SWPS C201 body	32	36	43	46	105
SWPS RL501 body	43	41	54	51	105
SWPS PC402 body	37	35	48	45	105
SWPS NR151 body	29	31	40	41	105
SWPS CR101 body	32	36	43	46	105
SWPS CN3 body	28	30	39	40	105
SWPS CN4 body	28	30	39	40	105
HVU B51 coil	32	36	43	46	90
HVU B101 coil	33	36	44	46	90
HVU B301 coil	31	31	42	41	90
HVU B501 coil	33	33	44	43	90
HVU B701 coil	36	34	47	44	90
Fax System (X) L001	31	33	42	43	90
Inlet Body	28	31	39	41	--
Cooling Fan	28	28	39	38	100
Drive Motor	35	59	46	69	100
ISU Motor	75	75	86	85	100

IEC 60950-1			
Clause	Requirement + Test	Result - Remark	Verdict

4.5	TABLE: Temperature rise measurements – continued.				P
Temperature of part/at: (measured with thermocouples)	Measured temperature at T_{amb}		Calculated temperature at T_{ma}		Allowed T_{max} (°C)
	C T (°C)	D T (°C)	C T (°C)	D T (°C)	
Eject Motor	48	49	59	59	100
Hopper Motor	32	33	43	43	100
Polygon Motor	36	48	47	58	100
Drive Clutch	28	53	39	63	90
MPF Solenoid	27	32	38	42	90
Fuser Unit, Primary Wire	76	71	87	81	--
Fuser Unit, Secondary Wire	86	78	97	88	--
Fuser Connector	47	48	58	58	--
Fuser Cover	81	86	92	96	--
Cassette Heater Body	53	41	64	51	--
Plastic Enclosure	48	51	59	61	95
Metal Enclosure	33	33	44	43	70
Feed Motor (DP-480) (Left)	28	76	39	86	100
Feed Motor (DP-480) (Center)	29	56	40	66	100
Junction Motor (DP-480)	29	62	40	72	100
Clutch (DP-480)	28	56	39	66	90
Plastic Enclosure (DP-480)	27	47	38	57	95
Supplementary information: Measured on Model TASKalfa 2201 with DP-480, three of PF-480 and Fax System (X).					
Temperatures measured with winding resistance method: Not used.					

IEC 60950-1			
Clause	Requirement + Test	Result - Remark	Verdict

4.5	TABLE: Temperature rise measurements	P

Temperatures were measured according cl. 1.4.5. Test in condition E and F at continuous normal operation as for power input measurements of table 1.6 resulted in highest temperature values.
Temperatures are calculated according cl. 1.4.12.3 with regard to the maximum ambient operation temperature of 35°C(Tma), as specified by the manufacturer.

test voltage(s) (V):		E: 242V, 50Hz, copying	F: 264V, 60Hz, copying
t_{amb1} (°C):	E: -- F: --	t_{amb2} (°C):	E: 24 F: 23

Temperature of part/at: (measured with thermocouples)	Measured temperature at T_{amb}		Calculated temperature at T_{ma}		Allowed T_{max} (°C)
	E T (°C)	F T (°C)	E T (°C)	F T (°C)	
SWPS T401 coil	48	48	59	60	110
SWPS T401 core	41	41	52	53	110
SWPS L101 coil	32	33	43	45	90
SWPS L151 coil	33	32	44	44	90
SWPS L801 coil	35	35	46	47	90
SWPS RC151 body	38	38	49	50	105
SWPS RC401 body	44	44	55	56	105
SWPS Q201 body	47	49	58	61	105
SWPS C201 body	34	34	45	46	105
SWPS RL501 body	38	39	49	51	105
SWPS PC402 body	31	32	42	44	105
SWPS NR151 body	29	28	40	40	105
SWPS CR101 body	33	33	44	45	105
SWPS CN3 body	28	28	39	40	105
SWPS CN4 body	29	28	40	40	105
HVU B51 coil	31	31	42	43	90
HVU B101 coil	32	32	43	44	90
HVU B301 coil	29	28	40	40	90
HVU B501 coil	29	29	40	41	90
HVU B701 coil	31	31	42	43	90
Fax System (X) L001	31	31	42	43	90
Inlet Body	29	29	40	41	--
Cooling Fan	26	26	37	38	100
Drive Motor	54	56	65	68	100
ISU Motor	76	73	87	85	100

IEC 60950-1			
Clause	Requirement + Test	Result - Remark	Verdict

4.5	TABLE: Temperature rise measurements – continued.				P
Temperature of part/at: (measured with thermocouples)	Measured temperature at T_{amb}		Calculated temperature at T_{ma}		Allowed T_{max} (°C)
	E T (°C)	F T (°C)	E T (°C)	F T (°C)	
Eject Motor	48	47	59	59	100
Hopper Motor	31	30	42	42	100
Polygon Motor	47	46	58	58	100
Drive Clutch	53	53	64	65	90
MPF Solenoid	31	30	42	42	90
Fuser Unit, Primary Wire	68	68	79	80	--
Fuser Unit, Secondary Wire	77	77	88	89	--
Fuser Connector	45	46	56	58	--
Fuser Cover	85	85	96	97	--
Cassette Heater Body	51	54	62	66	--
Plastic Enclosure	50	50	61	62	95
Metal Enclosure	32	31	43	43	70
Feed Motor (DP-480) (Left)	74	74	85	86	100
Feed Motor (DP-480) (Center)	55	55	66	67	100
Junction Motor (DP-480)	60	61	71	73	100
Clutch (DP-480)	55	54	66	66	90
Plastic Enclosure (DP-480)	46	45	57	57	95
Feed Motor (PF-480)	27	26	38	38	100
Feed Clutch (PF-480)	26	26	37	38	90
Cassette Heater Body (PF-480)	68	74	79	86	--
Plastic Enclosure (PF-480)	25	25	36	37	95
Supplementary information: Measured on Model TASKalfa 2201 with DP-480, three of PF-480 and Fax System (X).					
Temperatures measured with winding resistance method: Not used.					

IEC 60950-1			
Clause	Requirement + Test	Result - Remark	Verdict

4.5	TABLE: Temperature rise measurements				P
Temperatures were measured according cl. 1.4.5. Test in condition G and H at continuous normal operation as for power input measurements of table 1.6 resulted in highest temperature values. Temperatures are calculated according cl. 1.4.12.3 with regard to the maximum ambient operation temperature of 35°C(Tma), as specified by the manufacturer.					
test voltage(s) (V):		G: 264V, 60Hz, copying		H: 264V, 60Hz, Fax operating	
t_{amb1} (°C):	G: --, H: --	t_{amb2} (°C):		G: 24, H: 23	
Temperature of part/at: (measured with thermocouples)	Measured temperature at T_{amb}		Calculated temperature at T_{ma}		Allowed T_{max} (°C)
	G T (°C)	H T (°C)	G T (°C)	H T (°C)	
SWPS T401 coil	51	39	60	51	110
SWPS T401 core	46	38	55	50	110
SWPS L101 coil	38	30	47	42	90
SWPS L151 coil	38	26	47	38	90
SWPS L801 coil	41	36	50	48	90
SWPS RC151 body	43	30	52	42	105
SWPS RC401 body	51	38	60	50	105
SWPS Q201 body	57	38	66	50	105
SWPS C201 body	39	30	48	42	105
SWPS RL501 body	44	41	53	53	105
SWPS PC402 body	37	34	46	46	105
SWPS NR151 body	33	26	42	38	105
SWPS CR101 body	38	29	47	41	105
SWPS CN3 body	33	25	42	37	105
SWPS CN4 body	32	26	41	38	105
HVU B51 coil	36	29	45	41	90
HVU B101 coil	37	31	46	43	90
HVU B301 coil	33	28	42	40	90
HVU B501 coil	34	30	43	42	90
HVU B701 coil	36	33	45	45	90
Fax System (X) L001	35	22	44	34	90
Inlet Body	34	25	43	37	--
Cooling Fan	30	25	39	37	100
Drive Motor	63	32	72	44	100
ISU Motor	77	73	86	85	100
Eject Motor	50	36	59	48	100

IEC 60950-1			
Clause	Requirement + Test	Result - Remark	Verdict

4.5	TABLE: Temperature rise measurements – continued.					P
Temperature of part/at: (measured with thermocouples)		Measured temperature at T_{amb}		Calculated temperature at T_{ma}		Allowed T_{max} (°C)
		G T (°C)	H T (°C)	G T (°C)	H T (°C)	
Hopper Motor		34	31	43	43	100
Polygon Motor		50	36	59	48	100
Drive Clutch		53	26	62	38	90
MPF Solenoid		34	25	43	37	90
Fuser Unit, Primary Wire		71	75	80	87	--
Fuser Unit, Secondary Wire		78	85	87	97	--
Fuser Connector		52	44	61	56	--
Fuser Cover		92	80	101	92	--
Cassette Heater Body		53	48	62	60	--
Plastic Enclosure		54	47	63	59	95
Metal Enclosure		35	31	44	43	70
Feed Motor (DP-480) (Left)		76	--	85	--	100
Feed Motor (DP-480) (Center)		56	--	65	--	100
Junction Motor (DP-480)		63	--	72	--	100
Clutch (DP-480)		57	--	66	--	90
Plastic Enclosure (DP-480)		48	--	57	--	95
Feed Motor (PF-480)		42	--	51	--	100
Feed Clutch (PF-480)		33	--	42	--	100
Cassette Heater Body (PF-480)		77	--	86	--	--
Plastic Enclosure (PF-480)		31	--	40	--	95
Supplementary information: G: Measured on TASKalfa 2201 with DP-480, three of PF-480 and Fax System (X).T401 on SWPS: Sanken Electric Co., Ltd., Type 41-925 H: Measured on Model TASKalfa 2201 with DP-480, three of PF-480 and Fax System (X).						
Temperatures measured with winding resistance method: Not used.						

IEC 60950-1			
Clause	Requirement + Test	Result - Remark	Verdict

4.5.5	TABLE: Ball pressure test of thermoplastic parts		P
	Allowed impression diameter (mm) .....:	≤ 2 mm	—

Part	Test temperature (°C)	Impression diameter (mm)
SWPS CN3 /Nylon	125	1.5
SWPS CN4 /PBT	125	1.6
SWPS L151 /PBT	125	1.6
SWPS L151, Alternate /PBT	125	1.6
Fuser Unit Heater Connector Plug /Nylon	125	1.5
Connector Receptacle for Fuser Heater /Nylon	125	1.5
Supplementary information:		

4.7	TABLE: Resistance to fire				P
Part	Manufacturer of material	Type of material	Thickness (mm)	Flammability class	Evidence
--	--	--	--	--	--
Supplementary information: See appended table 1.5.1 for details.					

IEC 60950-1			
Clause	Requirement + Test	Result - Remark	Verdict

5.1	**TABLE: touch current measurement**		P
	Test voltage (V) ..... :	See below	—

Measurement location (Terminal A connected to...)	Polarity (normal) [mA]		Polarity (reverse) [mA]		Limit (mA)	Comments
	Switch: ON	Switch: OFF	Switch: ON	Switch: OFF		
Earth terminal ("e" = open)	0.48	0.47	0.465	0.47	3.5	AC 264V, 50Hz
LAN Connector ("e" = close)	0	0	0	0	0.25	AC 264V, 50Hz
Fax System (X) TNV Connector ("e" = close)	0	0	0	0	0.25	AC 264V, 50Hz
Supplementary information: None.						

IEC 60950-1			
Clause	Requirement + Test	Result - Remark	Verdict

5.2	TABLE: Electric strength tests, impulse tests and voltage surge tests		P
Test voltage applied between:	Voltage shape (AC, DC, impulse, surge)	Test voltage (V)	Breakdown Yes / No
Basic / supplementary:			
Equipment (primary – earth)	AC	2000	No
Switching Power Supply Unit (primary – core)	AC	2000	No
Switching Power Supply Unit (secondary – core)	AC	2000	No
Transformer T401 on SWPS (GanZhouCity Chao Yue Precision Electronics Co, Ltd., 41-925) (primary – core)	AC	2000	No
Transformer T401 on SWPS (GanZhouCity Chao Yue Precision Electronics Co, Ltd., type 41-925) (secondary – core)	AC	2000	No
Transformer T401 on SWPS (Sanken Electric Co., Ltd., type 41-925) (primary – core)	AC	2000	No
Transformer T401 on SWPS (Sanken Electric Co., Ltd., type 41-925) (secondary – core)	AC	1500	No
Photo Coupler (PC1) on Fax System (X) (TNV – secondary)	AC	1500	No
Alternate Photo Coupler (PC1) on Fax System (X) (TNV – secondary)	AC	1500	No
Reinforced:			
Equipment (primary – secondary)	AC	3000	No
Switching Power Supply Unit (primary – secondary)	AC	3000	No
Transformer T401 on SWPS (GanZhouCity Chao Yue Precision Electronics Co, Ltd., type 41-925) (primary - secondary)	AC	3000	No
Transformer T401 on SWPS (Sanken Electric Co., Ltd., type 41-925) (primary - secondary)	AC	3000	No
Photo Coupler (PC101, PC102, PC402) on SWPS (Primary – secondary)	AC	3000	No
Photo Coupler, Alternate (PC101, PC102, PC402) on SWPS (Primary – secondary)	AC	3000	No
Photo Coupler (PC501, PC502) on SWPS (Primary – secondary)	AC	3000	No
Photo Coupler, Alternate (PC501, PC502) on SWPS (Primary – secondary)	AC	3000	No
Supplementary information: Test voltage for 1 min.			

IEC 60950-1			
Clause	Requirement + Test	Result - Remark	Verdict

5.3	TABLE: Fault condition tests		P
	Ambient temperature (°C) ..... :	25◦C if not stated in Observation otherwise.	—
	Power source for EUT: Manufacturer, model/type, output rating ..... :	--	—

Component No.	Fault	Supply voltage (V)	Test time	Fuse #	Fuse current (A)	Observation
Switching Power Supply Unit, T401	24V output overload with Fan	240V / 50Hz	4.5h	F151	6.3	All output shutdown after 5.5A. Q201 was shorted. F151 was opened. Temp. of T401: 80 ºC. Ambient: 24 ºC No hazards. HV test: 3000Vac passed.
Switching Power Supply Unit, T401	24V output overload without Fan	240V / 50Hz	3h	F151	6.3	All output shutdown after 5A. Q201 was shorted. F151 was opened. Temp. of T401: 110 ºC. Ambient: 24 ºC No hazards. HV test: 3000Vac passed.
Switching Power Supply Unit, NR151	short	240V / 50Hz	10min	F151	6.3	24V output shutdown. F151 was opened. No hazards. HV test: 3000Vac passed.
Switching Power Supply Unit, RC151	Short	240V / 50Hz	10min	F151	6.3	24V output shutdown. F151 was opened. No hazards. HV test: 3000Vac passed.
Switching Power Supply Unit, C201	Short	240V / 50Hz	10min	F151	6.3	24V output shutdown. F151 was opened. No hazards. HV test: 3000Vac passed.

IEC 60950-1			
Clause	Requirement + Test	Result - Remark	Verdict

5.3	TABLE: Fault condition tests – continued.						P
Component No.	Fault	Supply voltage (V)	Test time	Fuse #	Fuse current (A)	Observation	
Switching Power Supply Unit, Q201 D – S	Short	240V / 50Hz	10min	F151	6.3	24V output shutdown. F151 was opened. D211, R212 and R211 were broken. No hazards. HV test: 3000Vac passed.	
Switching Power Supply Unit, Q201 G	Open	240V / 50Hz	10min	F151	6.3	24V output shutdown. F151 was opened. No hazards. HV test: 3000Vac passed.	
Switching Power Supply Unit, PC402 1-2	Short	240V / 50Hz	10min	--	--	24V output shutdown. No hazards. HV test: 3000Vac passed.	
Switching Power Supply Unit, C202	Short	240V / 50Hz	10min	--	--	24V output shutdown. No hazards. HV test: 3000Vac passed.	
Switching Power Supply Unit, RC401	Short	240V / 50Hz	10min	--	--	24V output shutdown. No hazards. HV test: 3000Vac passed.	
Switching Power Supply Unit, C401	Short	240V / 50Hz	10min	--	--	24V output shutdown. No hazards. HV test: 3000Vac passed.	
Switching Power Supply Unit, C409	Short	240V / 50Hz	10min	--	--	24V output shutdown. No hazards. HV test: 3000Vac passed.	
High Voltage Unit Q101 C-E	Short	24Vdc	--	F1	1.6A	All output shutdown. Fuse F1 was opened. No hazards.	

IEC 60950-1			
Clause	Requirement + Test	Result - Remark	Verdict

5.3	TABLE: Fault condition tests – continued.						P
Component No.	Fault	Supply voltage (V)	Test time	Fuse #	Fuse current (A)	Observation	
High Voltage Unit D109	Open	24Vdc	10min	--	--	Operating normally. No hazards.	
High Voltage Unit C107	Short	24Vdc	10min	--	--	Output M was shutdown. No hazards.	
High Voltage Unit Q501 C-E	Short	24Vdc	--	F1	1.6A	All output shutdown. Fuse F1 was opened. No hazards.	
High Voltage Unit D505	Short	24Vdc	--	F1	1.6A	All output shutdown. Fuse F1 was opened. Q501 was broken. No hazards.	
High Voltage Unit Q51 C-E	Short	24Vdc	--	F1	1.6A	All output shutdown. Fuse F1 was opened. No hazards.	
High Voltage Unit D53	Open	24Vdc	10min	--	--	Output T was increased. No hazards.	
High Voltage Unit Q301 C- E	Short	24Vdc	--	F1	1.6A	All output shutdown. Fuse F1 was opened. No hazards.	
High Voltage Unit Q302 C-E	Short	24Vdc	--	F1	1.6A	All output shutdown. Fuse F1 was opened. No hazards.	
High Voltage Unit Q701 C-E	Short	24Vdc	--	F1	1.6A	All output shutdown. Fuse F1 was opened. No hazards.	
High Voltage Unit R702	Open	24Vdc	10min	--	--	Output S was shutdown. No hazards.	

IEC 60950-1			
Clause	Requirement + Test	Result - Remark	Verdict

5.3	TABLE: Fault condition tests – continued.					P
Component No.	Fault	Supply voltage (V)	Test time	Fuse #	Fuse current (A)	Observation
ISU Motor Type ST35B-9610-A	CE	24Vdc	10min	--	--	Motor winding was opened after 6min. Max temp.: 173 ºC, Ambient: 23 ºC No hazards.
Eject Motor Type PM42M-048-MIL 1	CE	24Vdc	10min	--	--	Motor winding was opened after 2min. Max temp.: 142 ºC, Ambient: 23 ºC No hazards.
Feed Motor (DP-480), Feed Motor (PF-480) Type PM42L-048-MIN4	CE	24Vdc	10min	--	--	Motor winding was opened after 5min. Max temp.: 150 ºC, Ambient: 23 ºC No hazards.
Drive Clutches, Clutch (DP-480, Feed Clutch (PF-480) Type MCA-50T	CE	24Vdc	7hours	--	--	Temperature was stabilized. Max temp.: 90ºC, Ambient: 23 ºC No hazards.
MPF Solenoid Type TDS-F06A-18	Plunger locked and CE	24Vdc	3hours	--	--	Temperature was stabilized. Max temp.: 140ºC, Ambient: 24 ºC No hazards.
Model TASKalfa 2201 Cooling Fan	Stalled fan	240V /50Hz	1.5 h	--	--	Temperature stabilized. Max. temp. of SWPS T401coil: 67ºC. Ambient: 22 ºC No hazards. HV test: 3000Vac passed.

IEC 60950-1			
Clause	Requirement + Test	Result - Remark	Verdict

5.3	TABLE: Fault condition tests – continued.						P
Component No.	Fault	Supply voltage (V)	Test time	Fuse #	Fuse current (A)	Observation	
Model TASKalfa 2201 Main Heater Thermal control	Disable	240V /50Hz	2 min	--	--	Thermal cutoff (center) was operated. Ambient: 25 ºC No hazards. HV test: 3000Vac passed.	
Model TASKalfa 2201 Sub Heater Thermal control	Disable	240V /50Hz	3 min	--	--	Thermal cutoff (side) was operated. Ambient: 25 ºC No hazards. HV test: 3000Vac passed.	
Ventilation openings closed	--	240V /50Hz	2.0 hours	--	--	Copying. Temperature stabilized. Max. temp.: 53ºC at T401coil of SWPS. Ambient temp.: 24ºC No hazards.	
Supplementary information: S = Shorted, O = Opened, OL = Overloaded, CE = Continuously Energized.							

IEC 60950-1			
Clause	Requirement + Test	Result - Remark	Verdict

C.2	TABLE: transformers						P
Loc.	Tested insulation	Working voltage peak / V (2.10.2)	Working voltage rms / V (2.10.2)	Required electric strength (5.2)	Required clearance / mm (2.10.3)	Required creepage distance / mm (2.10.4)	Required distance thr. insul. (2.10.5)
Loc.	Tested insulation			Test voltage/ V	Measured clearance / mm	Measured creepage dist./ mm	Measured distance thr. insul. / mm; number of layers
supplementary information:							
Refer to the table 2.10.3 and 2.10.4							

IEC 60950-1			
Clause	Requirement + Test	Result - Remark	Verdict

List of test equipment used: at TMP

Manegement No.	Test Instrument Name	Type	Mecanical No.	Manufacturing	Calibration Date - Last	Calibration Date - Due
G14-C094	Lekage current tester	228	348	Simpson	2012-06-20	2013-06-19
G14-C095	Ball Pressure tester	T-10.02	BP-001	EXCEL	2012-08-02	2013-08-01
G14-C096	High Voltage probe	P6015A	B051259	Tektronix	2013-01-25	2014-01-24
G14-C097	Portable DC Ammeters & Voltmeters	201200	85AA1194	Yokogawa	2012-06-20	2013-06-19
G14-C099	Digital Multi Meter	(Fluke) 189	89410662	FLUKE	2012-08-08	2013-08-07
G14-C101	Temperature Recorder	437124	S5F703898	Yokogawa	2012-08-13	2013-08-12
G14-C102	Temperature Recorder	437124	S5F703899	Yokogawa	2012-08-13	2013-08-12
G14-C103	Steel Ball	TB-500	G14-C103	EXCEL	2012-09-19	2013-09-18
G14-C104	Steel Ball	TB-500	G14-C104	EXCEL	2012-09-19	2013-09-18
G14-C112	Scale Lupe	Scale Lupe 10x	G14-C112	PEAK	2012-05-18	2013-05-17
G14-C113	Steel Ruler 2m	No. 102H04J	G14-C113	Shinwa	2012-05-15	2013-05-14
G14-C114	Temp. and Humidty Meter	NT3-D	50173024	Rotronic	2012-03-19	2013-03-18
G14-C117	Digital Force Gauge	Z2-500N	202869	IMADA	2012-10-22	2013-10-21
G14-C118	Stop Watch	SVAE101	756428	SEIKO S-YARD	2012-10-23	2013-10-22
G14-C122	Power Meter	253401	2534FA042	Yokogawa	2012-03-26	2013-03-25
G14-C125	Dielectric Tester	TOS5051	BA002985	Kikusui	2012-07-18	2013-07-17
G14-C128	Earth Continutity Tester	TOS6210	MB005213	Kikusui	2013-01-18	2014-01-17
G14-C131	Vernier Caliper	CD-20B	10369	Mitsutoyo	2012-08-01	2013-07-31
G14-D001	Digital Oscilloscope	TDS3054B	B011872	Sony Tektronix	2012-05-18	2013-05-17
TS-46	Chamber	LP-201	1040000403	TABAI ESPEC	--	--
TS-48	Compressor	TMC-5-120	D-670	Japan T.M.C	2012-09-24	2013-09-23
TS-50	Humidity Chamber	PR-3ST	0	TABAI	--	--

TS-46 was monitored with G14-C101
TS-50 was monitored with G14-C114

Supplementary information: The equipment was used with TMP.

ATTACHMENT	Measurement Section		
Clause	Requirement + Test	Result - Remark	Verdict

2.1.1.7	TABLE: Discharge test				P
Condition	τ calculated (s)	τ measured (s)	t u→ 0V (s)	Comments	
Appliance inlet terminals Main SW OFF	---	680ms	3.4s	Initial Voltage (peak) V_0 : 396V After 1sec 65) V	
Appliance inlet terminals Main SW ON	---	180ms	560ms	Initial Voltage (peak) V_0 : 390V After 1sec 0 V	
Supplementary information: 264V, 50Hz					

ATTACHMENT	Measurement Section		
Clause	Requirement + Test	Result - Remark	Verdict

4.6.1	Table: Enclosure opening measurements		P
Location	Size (mm)	Comments	
Exit Rear Cover on main unit	10.6 max. x 3.0 slot 9.6 max. x 3.0 slot	Covering two areas of 50.0mm W x 33.0mm H Covering an area of 40.0mm W x 33.0mm H	
	9.6 max. x 3.0 slot	Covering two areas of 80.0mm W x 23.0mm H	
	9.6 max. x 3.0 slot	Covering an area of 80.0mm W x 23.0mm H Covering an area of 80.0mm W x 48.0mm H	
Exit Upper Cover on main unit	10.0 max. x 3.0 slot	Covering six areas of 42.0mm W x 28.0mm H	
Left Cover on main unit	11.0 max. x 3.0 slot	Covering four areas of 68.0mm W x 48.0mm H	
Rear Cover on main unit	11.0 max. x 2.0 slot	Covering two areas of 58.0mm W x 87.0mm H	
	12.0 max. x 2.6 slot	Covering two areas of 50.0mm W x 17.6mm H	
	11.0 max. x 2.4 slot	Covering an area of 45.0mm W x 42.4mm H	
	13.5 max. x 2.2 slot	Covering two areas of 41.5mm W x 82.2mm H	
	11.0 max. x 2.0 slot	Covering an area of 68.0mm W x 47.0mm H	
Right Middle Cover on main unit	3.3 x 3.0 slot 13.8 x 3.0 slot 26.5 x 3.0 slot	Covering two areas of 46.0mm W x 48.0mm H	
	26.3 x 3.0 slot 18.5 x 3.0 slot	Covering two areas of 46.0mm W x 48.0mm H	
Right Rear Cover on main unit	10.0 x 3.0 slot,	Covering an area of 10.0mm W x 98.0mm H Covering an area of 10.0mm W x 88.0mm H	
Right Upper Cover on main unit	11.2 max. x 2.4 slot	Covering seven areas of 46.0mm W x 22.4mm H	
Rear Cover on DP-480	30.0. x 2.7 slot	Covering an area of 30.0mm W x 18.7mm H	
	40.5 x 2.7 slot	Covering two areas of 40.5mm W x 34.7mm H	
	20.0 x 2.7 slot	Covering an area of 20.0mm W x 10.7mm H	
	40.5 x 2.7 slot	Covering two areas of 40.5mm W x 18.7mm H	
Supplementary information: None.			

ATTACHMENT	Measurement Section		
Clause	Requirement + Test	Result - Remark	Verdict

B	TABLE: MOTOR TESTS UNDER ABNORMAL CONDITIONS - continued	P
B.7	Locked-rotor overload test for d.c. motors in secondary circuits	--

Motor type / No.	Max. Temp. (°C)	Comments
Cooling Fan Type D08K-24TU 83 (AX)	48	Amb. Temp.: 26°C. Cheesecloth did not ignite. No hazard.
Drive Motor Type DNQ06K10L13F	--	Sensing circuits provided with motor disconnected power to the motor in 2 sec. After starting the locked rotor. No hazard.
Hopper Motor Type RC370-KT-081000	123	Amb. Temp.: 25°C. Cheesecloth did not ignite. No hazard.
Polygon Motor Type MASQ5F4LK	--	Sensing circuits provided with motor disconnected power to the motor in 0.87 sec. After starting the locked rotor. No hazard.
Supplementary information: None.		

EN 60950-1			
Clause	Requirement + Test	Result - Remark	Verdict

EN 60950-1:2006 – CENELEC COMMON MODIFICATIONS			
Contents	**Add** the following annexes: **Annex ZA** (normative) Normative references to international publications with their corresponding European publications **Annex ZB** (normative) Special national conditions **Annex ZC** (informative) A-deviations		P
General	**Delete** all the "country" notes in the reference document according to the following list: 1.4.8 Note 2; 1.5.1 Note 2 & 3; 1.5.7.1 Note 1.5.8 Note 2; 1.5.9.4 Note; 1.7.2.1 Note 4, 5 & 6 2.2.3 Note; 2.2.4 Note; 2.3.2 Note 2.3.2.1 Note 2; 2.3.4 Note 2; 2.6.3.3 Note 2 & 3 2.7.1 Note; 2.10.3.2 Note 2; 2.10.5.13 Note 3 3.2.1.1 Note; 3.2.4 Note 3.; 2.5.1 Note 2 4.3.6 Note 1 & 2; 4.7 Note 4; 4.7.2.2 Note 4.7.3.1 Note 2; 5.1.7.1 Note 3 & 4; 5.3.7 Note 1 6 Note 2 & 5; 6.1.2.1 Note 2; 6.1.2.2 Note 6.2.2 Note 6.; 2.2.1 Note 2; 6.2.2.2 Note 7.1 Note 3; 7.2 Note; 7.3 Note 1 & 2 G.2.1 Note 2; Annex H Note 2		P
1.3.Z1	**Add** the following subclause: **1.3.Z1 Exposure to excessive sound pressure** The apparatus shall be so designed and constructed as to present no danger when used for its intended purpose, either in normal operating conditions or under fault conditions, particularly providing protection against exposure to excessive sound pressures from headphones or earphones. NOTE Z1 A new method of measurement is described in EN 50332-1, Sound system equipment: Headphones and earphones associated with portable audio equipment - Maximum sound pressure level measurement methodology and limit considerations - Part 1: General method for "one package equipment", and in EN 50332-2, Sound system equipment: Headphones and earphones associated with portable audio equipment - Maximum sound pressure level measurement methodology and limit considerations - Part 2: Guidelines to associate sets with headphones coming from different manufacturers.		N/A
1.5.1	**Add** the following NOTE: NOTE Z1 The use of certain substances in electrical and electronic equipment is restricted within the EU: see Directive 2002/95/EC		P
1.7.2.1	**Add** the following NOTE: NOTE Z1 In addition, the instructions shall include, as far as applicable, a warning that excessive sound pressure from earphones and headphones can cause hearing loss		N/A

EN 60950-1			
Clause	Requirement + Test	Result - Remark	Verdict
2.7.1	**Replace** the subclause as follows: Basic requirements To protect against excessive current, short-circuits and earth faults in PRIMARY CIRCUITS, protective devices shall be included either as integral parts of the equipment or as parts of the building installation, subject to the following, a), b) and c): a) except as detailed in b) and c), protective devices necessary to comply with the requirements of 5.3 shall be included as parts of the equipment; b) for components in series with the mains input to the equipment such as the supply cord, appliance coupler, r.f.i. filter and switch, short-circuit and earth fault protection may be provided by protective devices in the building installation; c) it is permitted for PLUGGABLE EQUIPMENT TYPE B or PERMANENTLY CONNECTED EQUIPMENT, to rely on dedicated overcurrent and short-circuit protection in the building installation, provided that the means of protection, e.g. fuses or circuit breakers, is fully specified in the installation instructions. If reliance is placed on protection in the building installation, the installation instructions shall so state, except that for PLUGGABLE EQUIPMENT TYPE A the building installation shall be regarded as providing protection in accordance with the rating of the wall socket outlet.		P
2.7.2	This subclause has been declared 'void'.		N/A
3.2.3	**Delete** the NOTE in Table 3A, and delete also in this table the conduit sizes in parentheses.		N/A
3.2.5.1	**Replace** "60245 IEC 53" by "H05 RR-F"; "60227 IEC 52" by "H03 VV-F or H03 VVH2-F"; "60227 IEC 53" by "H05 VV-F or H05 VVH2-F2". In Table 3B, replace the first four lines by the following: | Up to and including 6 | 0,75 [a)] | | Over 6 up to and including 10 | (0,75) [b)] 1,0 | | Over 10 up to and including 16 | (1,0) [c)] 1,5 | In the conditions applicable to Table 3B delete the words "in some countries" in condition [a)]. In NOTE 1, applicable to Table 3B, delete the second sentence.		P

EN 60950-1			
Clause	Requirement + Test	Result - Remark	Verdict
3.3.4	In Table 3D, **delete** the fourth line: conductor sizes for 10 to 13 A, and replace with the following: | Over 10 up to and including 16 | 1,5 to 2,5 | 1,5 to 4 | Delete the fifth line: conductor sizes for 13 to 16 A.		N/A
4.3.13.6	**Add** the following NOTE: NOTE Z1 Attention is drawn to 1999/519/EC: Council Recommendation on the limitation of exposure of the general public to electromagnetic fields 0 Hz to 300 GHz. Standards taking into account this Recommendation which demonstrate compliance with the applicable EU Directive are indicated in the OJEC.		N/A
Annex H	**Replace** the last paragraph of this annex by: At any point 10 cm from the surface of the OPERATOR ACCESS AREA, the dose rate shall not exceed 1 µSv/h (0,1 mR/h) (see NOTE). Account is taken of the background level. **Replace** the notes as follows: NOTE These values appear in Directive 96/29/Euratom. **Delete** NOTE 2.		N/A
Biblio-graphy	**Add** the EN standards. **Add** the notes for the standards indicated:		—

ZA	NORMATIVE REFERENCES TO INTERNATIONAL PUBLICATIONS WITH THEIR CORRESPONDING EUROPEAN PUBLICATIONS	—

ZB	SPECIAL NATIONAL CONDITIONS		P
1.2.4.1	In **Denmark**, certain types of Class I appliances (see 3.2.1.1) may be provided with a plug not establishing earthing conditions when inserted into Danish socket-outlets.		N/A
1.5.7.1	In **Finland**, **Norway** and **Sweden**, resistors bridging BASIC INSULATION in CLASS I PLUGGABLE EQUIPMENT TYPE A must comply with the requirements in 1.5.7.2.		N/A
1.5.8	In **Norway**, due to the IT power system used (see annex V, Figure V.7), capacitors are required to be rated for the applicable line-to-line voltage (230 V).	Considered.	P
1.5.9.4	In **Finland**, **Norway** and **Sweden**, the third dashed sentence is applicable only to equipment as defined in 6.1.2.2 of this annex.		N/A

EN 60950-1			
Clause	Requirement + Test	Result - Remark	Verdict
1.7.2.1	In **Finland**, **Norway** and **Sweden**, CLASS I PLUGGABLE EQUIPMENT TYPE A intended for connection to other equipment or a network shall, if safety relies on connection to protective earth or if surge suppressors are connected between the network terminals and accessible parts, have a marking stating that the equipment must be connected to an earthed mains socket-outlet. The marking text in the applicable countries shall be as follows: In Finland: "Laite on liitettävä suojamaadoituskoskettimilla varustettuun pistorasiaan" In Norway: “Apparatet må tilkoples jordet stikkontakt” In Sweden: “Apparaten skall anslutas till jordat uttag”		P
1.7.5	In **Denmark**, socket-outlets for providing power to other equipment shall be in accordance with the Heavy Current Regulations, Section 107-2-D1, Standard Sheet DK 1-3a, DK 1-5a or DK 1-7a, when used on Class I equipment. For STATIONARY EQUIPMENT the socket-outlet shall be in accordance with Standard Sheet DK 1-1b or DK 1-5a.	No such construction.	N/A
2.2.4	In **Norway**, for requirements see 1.7.2.1, 6.1.2.1 and 6.1.2.2 of this annex.		P
2.3.2	In **Finland**, **Norway** and **Sweden** there are additional requirements for the insulation. See 6.1.2.1 and 6.1.2.2 of this annex.		P
2.3.4	In **Norway**, for requirements see 1.7.2.1, 6.1.2.1 and 6.1.2.2 of this annex.		P
2.6.3.3	In the **United Kingdom**, the current rating of the circuit shall be taken as 13 A, not 16 A.		P
2.7.1	In the **United Kingdom**, to protect against excessive currents and short-circuits in the PRIMARY CIRCUIT of DIRECT PLUG-IN EQUIPMENT, tests according to 5.3 shall be conducted, using an external protective device rated 30 A or 32 A. If these tests fail, suitable protective devices shall be included as integral parts of the DIRECT PLUG-IN EQUIPMENT, so that the requirements of 5.3 are met.	Not direct plug-in	N/A
2.10.5.13	In **Finland**, **Norway** and **Sweden**, there are additional requirements for the insulation, see 6.1.2.1 and 6.1.2.2 of this annex.		P

EN 60950-1			
Clause	Requirement + Test	Result - Remark	Verdict
3.2.1.1	In **Switzerland**, supply cords of portable electrical appliances having a rated current not exceeding 10 A shall be provided with a plug complying with IEC 60884-1(3.ed.) + am1, SEV 1011 and one of the following dimension sheets: - SEV 6533-2:2009 Plug type 11, L + N, 250V 10A - SEV 6534-2:2009 Plug type 12, L + N + PE, 250V 10A - SEV 6532-2:2009 Plug type 15, 3L + N + PE, 250/400V 10A Supply cords of portable electrical appliances having a rated current not exceeding 16 A shall be provided with a plug complying with IEC 60884-1(3.ed.) + am1, SEV 1011 and one of the following dimension sheets: - SEV 5933-2:2009 Plug type 21 L + N, 250 V, 16A - SEV 5934-2:2009 Plug type 23 L + N + PE, 250 V, 16A - SEV 5932-2:2009 Plug type 25 3L + N + PE, 250/400V 16A NOTE 16 A plugs are not often used in Swiss domestic installation system.		N/A
3.2.1.1	In **Denmark**, supply cords of single-phase equipment having a rated current not exceeding13 A shall be provided with a plug according to the Heavy Current Regulations, Section 107-2-D1. CLASS I EQUIPMENT provided with socket-outlets with earth contacts or which are intended to be used in locations where protection against indirect contact is required according to the wiring rules shall be provided with a plug in accordance with standard sheet DK 2-1a or DK 2-5a. If poly-phase equipment and single-phase equipment having a RATED CURRENT exceeding 13 A is provided with a supply cord with a plug, this plug shall be in accordance with the Heavy Current Regulations, Section 107-2-D1 or EN 60309-2.		N/A
3.2.1.1	In **Spain**, supply cords of single-phase equipment having a rated current not exceeding 10 A shall be provided with a plug according to UNE 20315:1994. Supply cords of single-phase equipment having a rated current not exceeding 2,5 A shall be provided with a plug according to UNE-EN 50075:1993. CLASS I EQUIPMENT provided with socket-outlets with earth contacts or which are intended to be used in locations where protection against indirect contact is required according to the wiring rules, shall be provided with a plug in accordance with standard UNE 20315:1994. If poly-phase equipment is provided with a supply cord with a plug, this plug shall be in accordance with UNE-EN 60309-2.		N/A

EN 60950-1			
Clause	Requirement + Test	Result - Remark	Verdict
3.2.1.1	In the **United Kingdom**, apparatus which is fitted with a flexible cable or cord and is designed to be connected to a mains socket conforming to BS 1363 by means of that flexible cable or cord and plug, shall be fitted with a 'standard plug' in accordance with Statutory Instrument 1768:1994 - The Plugs and Sockets etc. (Safety) Regulations 1994, unless exempted by those regulations. NOTE 'Standard plug' is defined in SI 1768:1994 and essentially means an approved plug conforming to BS 1363 or an approved conversion plug.		N/A
3.2.1.1	In **Ireland**, apparatus which is fitted with a flexible cable or cord and is designed to be connected to a mains socket conforming to I.S. 411 by means of that flexible cable or cord and plug, shall be fitted with a 13 A plug in accordance with Statutory Instrument 525:1997 - National Standards Authority of Ireland (section 28) (13 A Plugs and Conversion Adaptors for Domestic Use) Regulations 1997.		N/A
3.2.4	In **Switzerland**, for requirements see 3.2.1.1 of this annex.		N/A
3.2.5.1	In the **United Kingdom**, a power supply cord with conductor of 1,25 mm^2 is allowed for equipment with a rated current over 10 A and up to and including 13 A.		N/A
3.3.4	In the **United Kingdom**, the range of conductor sizes of flexible cords to be accepted by terminals for equipment with a RATED CURRENT of over 10 A up to and including 13 A is: • 1,25 mm^2 to 1,5 mm^2 nominal cross-sectional area.		N/A
4.3.6	In the **United Kingdom**, the torque test is performed using a socket outlet complying with BS 1363 part 1:1995, including Amendment 1:1997 and Amendment 2:2003 and the plug part of DIRECT PLUG-IN EQUIPMENT shall be assessed to BS 1363: Part 1, 12.1, 12.2, 12.3, 12.9, 12.11, 12.12, 12.13, 12.16 and 12.17, except that the test of 12.17 is performed at not less than 125 °C. Where the metal earth pin is replaced by an Insulated Shutter Opening Device (ISOD), the requirements of clauses 22.2 and 23 also apply.	Not direct plug-in.	N/A
4.3.6	In **Ireland**, DIRECT PLUG-IN EQUIPMENT is known as plug similar devices. Such devices shall comply with Statutory Instrument 526:1997 - National Standards Authority of Ireland (Section 28) (Electrical plugs, plug similar devices and sockets for domestic use) Regulations, 1997.	Not direct plug-in.	N/A

EN 60950-1			
Clause	Requirement + Test	Result - Remark	Verdict
5.1.7.1	In **Finland**, **Norway** and **Sweden** TOUCH CURRENT measurement results exceeding 3,5 mA r.m.s. are permitted only for the following equipment: • STATIONARY PLUGGABLE EQUIPMENT TYPE A that - is intended to be used in a RESTRICTED ACCESS LOCATION where equipotential bonding has been applied, for example, in a telecommunication centre; and - has provision for a permanently connected PROTECTIVE EARTHING CONDUCTOR; and - is provided with instructions for the installation of that conductor by a SERVICE PERSON; • STATIONARY PLUGGABLE EQUIPMENT TYPE B; • STATIONARY PERMANENTLY CONNECTED EQUIPMENT.		N/A

EN 60950-1			
Clause	Requirement + Test	Result - Remark	Verdict
6.1.2.1	In **Finland**, **Norway** and **Sweden**, add the following text between the first and second paragraph of the compliance clause: If this insulation is solid, including insulation forming part of a component, it shall at least consist of either - two layers of thin sheet material, each of which shall pass the electric strength test below, or - one layer having a distance through insulation of at least 0,4 mm, which shall pass the electric strength test below. If this insulation forms part of a semiconductor component (e.g. an optocoupler), there is no distance through insulation requirement for the insulation consisting of an insulating compound completely filling the casing, so that CLEARANCES and CREEPAGE DISTANCES do not exist, if the component passes the electric strength test in accordance with the compliance clause below and in addition - passes the tests and inspection criteria of 2.10.11 with an electric strength test of 1,5 kV multiplied by 1,6 (the electric strength test of 2.10.10 shall be performed using 1,5 kV), and - is subject to ROUTINE TESTING for electric strength during manufacturing, using a test voltage of 1,5 kV. It is permitted to bridge this insulation with a capacitor complying with EN 132400:1994, subclass Y2. A capacitor classified Y3 according to EN 132400:1994, may bridge this insulation under the following conditions: - the insulation requirements are satisfied by having a capacitor classified Y3 as defined by EN 132400, which in addition to the Y3 testing, is tested with an impulse test of 2,5 kV defined in EN 60950-1:2006, 6.2.2.1; - the additional testing shall be performed on all the test specimens as described in EN 132400; - the impulse test of 2,5 kV is to be performed before the endurance test in EN 132400, in the sequence of tests as described in EN 132400.		P
6.1.2.2	In **Finland**, **Norway** and **Sweden**, the exclusions are applicable for PERMANENTLY CONNECTED EQUIPMENT, PLUGGABLE EQUIPMENT TYPE B and equipment intended to be used in a RESTRICTED ACCESS LOCATION where equipotential bonding has been applied, e.g. in a telecommunication centre, and which has provision for a permanently connected PROTECTIVE EARTHING CONDUCTOR and is provided with instructions for the installation of that conductor by a SERVICE PERSON.		N/A
7.2	In **Finland**, **Norway** and **Sweden**, for requirements see 6.1.2.1 and 6.1.2.2 of this annex. The term TELECOMMUNICATION NETWORK in 6.1.2 being replaced by the term CABLE DISTRIBUTION SYSTEM.		N/A

EN 60950-1			
Clause	Requirement + Test	Result - Remark	Verdict
7.3	In **Norway** and **Sweden**, there are many buildings where the screen of the coaxial cable is normally not connected to the earth in the building installation.		N/A
7.3	In **Norway**, for installation conditions see EN 60728-11:2005.		N/A
ZC	A-DEVIATIONS (informative)		P
1.5.1	**Sweden** (Ordinance 1990:944) Add the following: NOTE In Sweden, switches containing mercury are not permitted.	(deleted by A11:2009 of EN 60950-1:2006)	N/A
1.5.1	**Switzerland** (Ordinance on environmentally hazardous substances SR 814.081, Annex 1.7, Mercury - Annex 1.7 of SR 814.81 applies for mercury) Switches containing mercury such as thermostats, relays and level controllers are not allowed.		N/A
1.7.2.1	**Denmark** (Heavy Current Regulations) Supply cords of CLASS I EQUIPMENT, which is delivered without a plug, must be provided with a visible tag with the following text: Vigtigt! Lederen med grøn/gul isolation må kun tilsluttes en klemme mærket ⏚ eller ⏚ If essential for the safety of the equipment, the tag must in addition be provided with a diagram, which shows the connection of the other conductors, or be provided with the following text: “For tilslutning af de øvrige ledere, se medfølgende installationsvejledning.”	(deleted by A11:2009 of EN 60950-1:2006)	N/A
1.7.2.1	**Germany** (Gesetz über technische Arbeitsmittel und Verbraucherprodukte (Geräte- und Produktsicherheitsgesetz – GPSG) [Law on technical labour equipment and consumer products], of 6th January 2004, Section 2, Article 4, Clause (4), Item 2). If for the assurance of safety and health certain rules during use, amending or maintenance of a technical labour equipment or readymade consumer product are to be followed, a manual in German language has to be delivered when placing the product on the market. Of this requirement, rules for use even only by SERVICE PERSONS are not exempted.		P

EN 60950-1			
Clause	Requirement + Test	Result - Remark	Verdict
1.7.5	**Denmark** (Heavy Current Regulations) With the exception of CLASS II EQUIPMENT provided with a socket outlet in accordance with the Heavy Current Regulations, Section 107-2-D1, Standard Sheet DK 1-4a, CLASS II EQUIPMENT shall not be fitted with socket-outlets for providing power to other equipment.	(deleted by A11:2009 of EN 60950-1:2006)	N/A
1.7.13	**Switzerland** (Ordinance on chemical hazardous risk reduction SR 814.81, Annex 2.15 Batteries) Annex 2.15 of SR 814.81 applies for batteries containing cadmium and mercury. Note: Ordinance relating to environmentally hazardous substances, SR 814.013 of 1986-06-09 is not longer in force and superseded by SR 814.81 of 2009-02-01 (ChemRRV).		N/A
5.1.7.1	**Denmark** (Heavy Current Regulations, Chapter 707, clause 707.4) TOUCH CURRENT measurement results exceeding 3,5 mA r.m.s. are permitted only for PERMANENTLY CONNECTED EQUIPMENT and PLUGGABLE EQUIPMENT TYPE B.	(deleted by A11:2009 of EN 60950-1:2006)	N/A

A11 of EN 60950-1			
Clause	Requirement + Test	Result - Remark	Verdict

A11 of EN 60950-1:2006 – CENELEC COMMON MODIFICATIONS		
ZA	**Normative references to international publications with their corresponding European publications**	P

ZB	**ANNEX ZB, SPECIAL NATIONAL CONDITIONS (EN)**		N/A
1.2.13.14	In **Norway** and **Sweden**, for requirements see 1.7.2.1 and 7.3 of this annex.	No cable distribution systems	N/A
1.5.7.1	**Replace** the existing SNC by the following: In **Finland, Norway** and **Sweden**, resistors bridging BASIC INSULATION in CLASS I PLUGGABLE EQUIPMENT TYPE A must comply with the requirements in 1.5.7.1. In addition when a single resistor is used, the resistor must withstand the resistor test in 1.5.7.2.	No such resistor	N/A
1.7.2.1	**Add** as new SNC: In **Norway** and **Sweden**, the screen of the cable distribution system is normally not earthed at the entrance of the building and there is normally no equipotential bonding system within the building. Therefore the protective earthing of the building installation need to be isolated from the screen of a cable distribution system. It is however accepted to provide the insulation external to the equipment by an adapter or an interconnection cable with galvanic isolator, which may be provided by e.g. a retailer. The user manual shall then have the following or similar information in Norwegian and Swedish language respectively, depending on in what country the equipment is intended to be used in: "Equipment connected to the protective earthing of the building installation through the mains connection or through other equipment with a connection to protective earthing – and to a cable distribution system using coaxial cable, may in some circumstances create a fire hazard. Connection to a cable distribution system has therefore to be provided through a device providing electrical isolation below a certain frequency range (galvanic isolator, see EN 60728-11)." NOTE In Norway, due to regulation for installations of cable distribution systems, and in Sweden, a galvanic isolator shall provide electrical insulation below 5 MHz. The insulation shall withstand a dielectric strength of 1,5 kV r.m.s., 50 Hz or 60 Hz, for 1 min. Translation to Norwegian (the Swedish text will also be accepted in Norway): "Utstyr som er koplet til beskyttelsesjord via nettplugg og/eller via annet jordtilkoplet utstyr – og er tilkoplet et kabel-TV nett, kan forårsake brannfare. For å unngå dette skal det ved tilkopling av utstyret til kabel-TV nettet installeres en galvanisk isolator mellom utstyret og kabel- TV nettet."	No cable distribution systems	N/A

A11 of EN 60950-1			
Clause	Requirement + Test	Result - Remark	Verdict
	Translation to Swedish: ”Utrustning som är kopplad till skyddsjord via jordat vägguttag och/eller via annan utrustning och samtidigt är kopplad till kabel-TV nät kan i vissa fall medföra risk för brand. För att undvika detta skall vid anslutning av utrustningen till kabel-TV nät galvanisk isolator finnas mellan utrustningen och kabel-TV nätet.”		
1.7.5	**Add** the following paragraph to the existing SNC for **Denmark**: For CLASS II EQUIPMENT the socket outlet shall be in accordance with Standard Sheet DKA 1-4a.		N/A
7.3	**Delete** the existing SNC for Norway and Sweden (based on NOTE 1 of IEC 60950-1:2005 + corr. 1). **Add** as new SNC (based on future NOTE 3 of IEC 60950-1:200X): In **Norway** and **Sweden**, for requirements see 1.2.13.14 and 1.7.2.1 of this annex.	No cable distribution systems	N/A

ZC	**ANNEX ZC, NATIONAL DEVIATIONS (EN)**		N/A
1.5.1	**Sweden** **Delete** the A-deviation.		N/A
1.7.2.1	**Denmark** **Delete** the A-deviation.		N/A
1.7.5	**Denmark** **Delete** the A-deviation.		N/A
5.1.7.1	**Denmark** **Delete** the A-deviation.		N/A

A1 of EN 60950-1			
Clause	Requirement + Test	Result - Remark	Verdict

A1 of EN 60950-1:2006 – CENELEC COMMON MODIFICATIONS			
Contents	**Add** the following annexes: **Annex ZA** (normative) Normative references to international publications with their corresponding European publications **Annex ZB** (normative) Special national conditions **Annex ZC** (none)		P
General	**Delete** all the "country" notes in the reference document according to the following list: 1.5.7.1 Note 6.1.2.1 Note 2 6.2.2.1 Note 2 Annex EE Note		P
1.1.1	**Replaced** the text of NOTE 3 by the following: NOTE 3 The requirements of EN 60065 may also be used to meet safety requirements for multimedia equipment. See guide 112, Guide on the safety of multimedia equipment. For television sets EN 60065 applies.	No such construction.	N/A
1.2.3	**Add** the following definition 1.2.3.Z1 PORTABLE SOUND SYSTEM Small battery powered audio equipment: - whose prime purpose is to listen to recorded or broadcasted sound; and - that uses headphones or earphones that can be worn in or on or around the ears; and - that allows the users to walk around NOTE Examples are mini-disk or CD players; MP3 audio players or similar equipment	No such construction.	N/A
1.7.2.1	**Delete** Note Z1 **Add** the following paragraph at the end of the subclause In addition, for a PORTABLE SOUND SYSTEM, the instructions shall include a warning that excessive sound pressure from earphone and headphone can cause hearing loss.	No such construction.	N/A
4.3.13.6	**Replace** the existing NOTE by the following: NOTE Z1 Attention is drawn to : 1999/519/EC: Council Recommendation on the limitation of exposure of the general public to electromagnetic fields 0 Hz to 300 GHz, and 2006/25/EC: directive on the minimum health and safety requirements regarding the exposure of workers to risks arising from physical agents 9artificial optical radiation). Standards taking into account mentioned Recommendation and Directive which demonstrate compliance with the applicable EU Directive are indicated in the OJEC		N/A
Biblio-graphy	**Add** the notes for the standards indicated:		—

A1 of EN 60950-1			
Clause	Requirement + Test	Result - Remark	Verdict

ZA	**Normative references to international publications with their corresponding European publications**	P

ZB	**ANNEX ZB, SPECIAL NATIONAL CONDITIONS (EN)**		P
1.5.7.1	In **Finland, Norway** and **Sweden** No changes needed – Correction of SNC already Part of A11		N/A
6.1.2.1	In **Finland**, **Norway** and **Sweden**, add the following text between the first and second paragraph of the compliance clause: If this insulation is solid, including insulation forming part of a component, it shall at least consist of either - two layers of thin sheet material, each of which shall pass the electric strength test below, or - one layer having a distance through insulation of at least 0,4 mm, which shall pass the electric strength test below. Alternatively for components, there is no distance through insulation requirements for the insulation consisting of an insulating compound completely filling the casing, so that CLEARANCES and CREEPAGE DISTANCES do not exist, if the component passes the electric strength test in accordance with the compliance clause below and in addition - passes the tests and inspection criteria of 2.10.11 with an electric strength test of 1,5 kV multiplied by 1,6 (the electric strength test of 2.10.10 shall be performed using 1,5 kV), and - is subject to ROUTINE TESTING for electric strength during manufacturing, using a test voltage of 1,5 kV. It is permitted to bridge this insulation with an optocoupler complying with 2.10.5.4 b). It is permitted to bridge this insulation with a capacitor complying with EN 60384-14:2005, subclass Y2. A capacitor classified Y3 according to EN 60384-14, may bridge this insulation under the following conditions: - the insulation requirements are satisfied by having a capacitor classified Y3 as defined by EN 60384-14, which in addition to the Y3 testing, is tested with an impulse test of 2,5 kV defined in EN 60950-1:2006, 6.2.2.1; - the additional testing shall be performed on all the test specimens as described in EN 60384-14; - the impulse test of 2,5 kV is to be performed before the endurance test in EN 60384-14, in the sequence of tests as described in EN 60384-14.		P

A12 of EN 60950-1			
Clause	Requirement + Test	Result - Remark	Verdict

A12 of EN 60950-1:2006 – CENELEC COMMON MODIFICATIONS

Z1	**ANNEX Z1, SPECIAL NATIONAL CONDITIONS (EN)**		P
1.3	**Delete** the addition of 1.3.Z1	(added by EN 60950-1:2006)	P
1.2.3	**Delete** the definition 1.2.3.Z1	(added by A1:2010 of EN 60950-1:2006)	P
1.7.2.1	**Delete** NOTE Z1 and the addition for Portable Sound System	(added by EN60950-1:2006 and A1:2010 of EN 60950-1:2006)	P

Zx	**Protection against excessive sound pressure from personal music players**		N/A
Zx.1	**General** This sub-clause specifies requirements for protection against excessive sound pressure from personal music players that are closely coupled to the ear. In also specifies requirements for earphones and headphones intended for use with personal music players. A personal music player is a portable equipment for personal use, that: - is designed to allow the user to listen to recorded or broadcast sound or video: and - primarily uses headphones or earphones that can be worn in or on or around the ears: and - allows the user to walk around while in use. Note 1 Examples are hand-held or body-worn portable CD players, MP3 audio players mobile phones with MP3 type features, PDA's or similar equipment. A personal music player and earphones or headphones intended to be used with personal music players shall comply with requirements of this sub-clause. The requirements in this sub-clause are valid for music or video mode only. The requirements do not apply: - while the personal music player is connected to an external amplifier; or - while the headphones or earphones are not used.		N/A

A12 of EN 60950-1			
Clause	Requirement + Test	Result - Remark	Verdict
	Note 2 An external amplifier is an amplifier which is not part of the personal music player or the listening device, but which is intended to play the music as a standalone music player. The requirements do not apply to: - hearing aid equipment and professional equipment; Note 3 Professional equipment is equipment sold through special sales channels. All products sold through normal electronics stores are considered not to be professional equipment. - analogue personal music players (personal music players without any kind of digital processing of the sound signal) that are brought to the market before the end of 2015. Note 4 This exemption has been allowed because this technology is falling out of use and it is expected that within a few years it will no longer exist. This exemption will not be extended to other technologies. For equipment which is clearly designed or intended for use by young children, the limits of EN 71-1 apply.		
Zx.2	**Equipment requirements** No safety provision is required for equipment that complies with the following: - equipment provided as a package (personal music player with its listening device), where the acoustic output L is ≤ 85dBA measured while playing the fixed "programme simulation noise" as described in EN 50322-1; and -a personal music player provided with an analogue electrical output socket for listening device, where the electrical output is ≤ 27mV measured as described in EN 50322-2, while playing the fixed "programme simulation noise" as described in EN 50332-1. Note 1 Wherever the term acoustic output is used in this clause, the 30s A weighted equivalent sound pressure level L is meant. See also Zx.5 and Annex Zx. All other equipment shall: a) Protect the user from unintentional acoustic outputs exceeding those mentioned above; and b) have a standard acoustic output level not exceeding those mentioned above, and automatically return to an output level not exceeding those mentioned above when the power is switched off; and		N/A

A12 of EN 60950-1			
Clause	Requirement + Test	Result - Remark	Verdict
	c) provide a means to actively inform the user of the increased sound pressure when the equipment is operated with an acoustic output exceeding those mentioned above. Any means used shall be acknowledged by the user before activating a mode of operation which allows for an acoustic output exceeding those mentioned above. The acknowledgement does not need to be repeated more than once every 20h of cumulative listening time; and Note 2 Examples of means include visual or audible signals. Action from the user is always required. Note 3 The 20h listening time is the accumulative listening time, independent how often and how long the personal music player has been switched off. d) have a warning as specified in Zx.3; and e) not exceed the following: 1) equipment provided as package (player with its listening device), the acoustic output shall be ≤100 dBA measured while playing the fixed "programme simulation noise" described in EN 50332-1; and 2) a personal music player provided with an analogue electrical output socket for a listening device, the electrical output shall be ≤ 150mV measured as described in EN 50332-1. For music where the average sound pressure measured over the duration of the song is lower than the average produced by the programme simulation noise, the warning does not need to be given as long as the average sound pressure of the song is below the basic limit of 85 dBA. In this case T becomes the duration of the song. Note 4 Classical music typically has an average sound pressure (long term L) which is much lower than the average programme simulation noise. Therefore, if the player is capable to analyse the song and compare it with the programme simulation noise, the warning does not need to be given as long as the average sound pressure of the song is below the basic limit of 85 dBA. For example, if the player is set with the programme simulation noise to 85 dBA, but the average music level of the song is only 65 dBA, there is no need to give a warning or ask an acknowledgement as long as the average sound level of the song is not above the basic limit of 85 dBA.		

A12 of EN 60950-1			
Clause	Requirement + Test	Result - Remark	Verdict
Zx.3	**Warning** The warning shall be placed on the equipment, or on the packaging, or in the instruction manual and shall consist of the following: -the symbol of Figure 1 with a minimum height of 5mm: and -the following wording, or similar: To prevent possible hearing damage, do not listen at high volume levels for long periods. Figure 1 – Warning label (IEC 60417-6044) Alternatively, the entire warning may be given through the equipment display during use, when the user is asked to acknowledge activation of the higher level.		N/A
Zx.4	**Requirements for listening devices (headphones and earphones)**		N/A
Zx.4.1	**Wired listening devices with analogue input** With 94 dBA sound pressure output L the input voltage of fixed"programme simulation noise" described in EN 5033-2 shall be ≥ 75mV. This requirement is applicable in any mode where the headphones can operate(active or passive), including any available setting (for example built-in volume level control). Note The values of 94 dBA – 75 mV correspond with 85dBA - 27mV and 100 dBA - 150mV.		N/A
Zx.4.2	**Wired listening devices with digital input** With any playing device playing the fixed "progamme simulation noise" described in EN 50332-1 (and respecting the digital interface standards, where a digital interface standard exists that specifies the equivalent acoustic level), the acoustic output L of the listening device shall be ≤ 100dBA. This requirement is applicable in any mode where the headphones can operate, including any available setting (for example built-in volume level control, additional sound feature like equalization, etc.). Note An example of a wired listening device with digital input is a USB headphone.		N/A

A12 of EN 60950-1			
Clause	Requirement + Test	Result - Remark	Verdict
Zx.4.3	**Wireless listening devices** In wireless mode: -with any playing and transmitting device playing the fixed programme simulation noise described in EN 50332-1; and -respecting the wireless transmission standards, where an air interface standard exists that specifies the equivalent acoustic level; and -with volume and sound setting in the listening device (for example built-in volume level control, additional sound feature like equalization, etc.) set to the combination of positions that maximize the measured acoustic output for the above-mentioned programme simulation noise. the acoustic output L of the listening device shall be ≤ 100dBA. Note An example of a wireless listening device is a Bluetooth headphone.		N/A
Zx.5	**Measurement methods** Measurements shall be made in accordance with EN 50332-1 or EN 50332-2 as applicable. Unless stated otherwise, the time interval T shall be 30 s. Note Test method for wireless equipment provided without listening device shoud be defined. Note Test method for wireless equipment provided without listening device should be defined.		N/A

Zx	**Significance of $L_{Aeq,T}$ in EN 50332-1 and additional information**	—

K 60950-1			
Clause	Requirement + Test	Result - Remark	Verdict
	Korean National Differences		—
	Corresponding National Standard: K 60950-1		—
1.5.101	Addition: Plugs for the connection of the apparatus to the supply mains shall comply with the Korean requirement (KSC 8305).	No plug provided. Suitable plug will be provided locally.	N/A
8	Addition: EMC The apparatus shall comply with the relevant CISPR standards.		N/A

TEST REPORT
IEC 60825-1, 2nd Edition
Part 1: Equipment classification and requirements

Report Reference No.....:	12311761 001
Date of issue .....:	(see cover page)
Total number of pages	--
CB Testing Laboratory.....:	TÜV Rheinland Japan Ltd., Osaka Laboratory
Address .....:	Wakasugi Center Bldg., Honkan 16F, 2-9-1 Higashi Tenma , Kita-ku, 530-0044 Osaka, JAPAN
Applicant's name.....:	KYOCERA Document Solutions Inc.
Address .....:	1-2-28, Tamatsukuri, Chuo-ku, Osaka-shi, Osaka, 540-8585 Japan
Test specification:	
Standard.....:	IEC 60825-1 : 2007 (2nd Edition)
Test procedure .....:	CB / CCA
Non-standard test method……..:	N/A
Test Report Form No.....:	IEC60825_1D
Test Report Form(s) Originator .....:	Intertek Semko AB
Master TRF .....:	Dated 2007-06

Copyright © 2007 IEC System for Conformity Testing and Certification of Electrical Equipment (IECEE), Geneva, Switzerland. All rights reserved.

This publication may be reproduced in whole or in part for non-commercial purposes as long as the IECEE is acknowledged as copyright owner and source of the material. IECEE takes no responsibility for and will not assume liability for damages resulting from the reader's interpretation of the reproduced material due to its placement and context.

If this Test Report Form is used by non-IECEE members, the IECEE/IEC logo and the reference to the CB Scheme procedure shall be removed.

This report is not valid as a CB Test Report unless signed by an approved CB Testing Laboratory and appended to a CB Test Certificate issued by an NCB in accordance with IECEE 02.

Test item description .....:	See IEC/EN 60950-1 test report.
Trade Mark .....:	See IEC/EN 60950-1 test report.
Manufacturer .....:	See IEC/EN 60950-1 test report.
Model/Type reference .....:	See IEC/EN 60950-1 test report.
Ratings .....:	See IEC/EN 60950-1 test report.

Copy of marking plate

See IEC/EN 60950-1 test report.

IEC 60825-1

Summary of testing: Tested and evaluated in accordance with IEC/EN 60825-1 except for subclause 4.14.1 Non-optical hazards. For the subclause, compliance will be checked in the end equipment. For measuring laser radiations from Laser Scan Unit, the Unit was controlled a testing jig supplied by the manufacturer.	
Tests performed (name of test and test clause): Clause 9 Measurements of accessible emission level	**Testing location:** (IEC/EN 60950-1 test report)
Additionally evaluated Test specifications. EN 60825-1:2007 (see below)	
Summary of compliance with National Differences: Only Annex ZA of EN 60825-1 exists and was evaluated. No additional requirements. See Appendix EU Group Differences (EN 60825-1:2007).	

Test item particulars:	
Classification of installation and use.....:	See IEC/EN 60950-1 test report.
Supply Connection .....:	See IEC/EN 60950-1 test report.
Possible test case verdicts:	
- test case does not apply to the test object.....:	N/A
- test object does meet the requirement.....:	P (Pass)
- test object does not meet the requirement.....:	F (Fail)
Testing .....:	
Date of receipt of test item .....:	See IEC/EN 60950-1 test report.
Date (s) of performance of tests .....:	See IEC/EN 60950-1 test report.

IEC 60825-1

General remarks:

The test results presented in this report relate only to the object tested.
This report shall not be reproduced, except in full, without the written approval of the Issuing testing laboratory.
"(see Enclosure #)" refers to additional information appended to the report.
"(see appended table)" refers to a table appended to the report.

Throughout this report a point is used as the decimal separator.

General product information:

See IEC 60950-1 test report.

The Unit has one laser diode, one polygon motor and mirror, one laser aperture.
The length of laser pass between the polygon mirror and aperture is 77.5mm.
The polygon motor runs on 24V dc and laser diode run on 3.3V dc.
Number of facets on the polygon mirror: 5
Polygon motor speeds: 30426.1rpm
Laser aperture dimensions: 127mm x 7.2mm
Laser scan angles for each laser aperture:
- Long sides of laser aperture: +33.155/-33.593 degrees
- Short sides of laser aperture: 10 degrees

IEC 60825-1			
Clause	Requirement + Test	Result – Remark	Verdict

4	**ENGINEERING SPECIFICATIONS**		**P**
4.1	General remarks		P
	Modification	Not modified product.	N/A
4.2	Protective housing		P
4.2.1	General		P
4.2.2	Service		P
4.2.3	Removable laser system	Not removable.	N/A
4.3	Access panels and safety interlocks		N/A
4.3.1	Access panels of protective housing	No access panels intended.	N/A
	Product Class .....:	Class 1 laser product.	—
	Accessible emission during removal of access panel .....:	--	N/A
	The removal of the panel gives access to laser radiation levels designated by “X” in the table		N/A
	Accessible emissions after removal .....:	--	—
4.3.2	Deliberate override mechanism	No such mechanisms.	N/A
4.4	Remote interlock connector	Class 1 laser product.	N/A
4.5	Manual reset	Class 1 laser product.	N/A
4.6	Key control	Class 1 laser product.	N/A
4.7	Laser radiation emission warning		N/A
4.7.1	Class 3R (λ<400 nm; λ>700 nm), 3B and 4	Class 1 laser product.	N/A
4.7.2	Audible or visible warning	Class 1 laser product.	N/A
4.7.3	Operational control and laser aperture		N/A
4.7.4	Laser emission distributed through more than one output		N/A
4.8	Beam stop or attenuation	Class 1 laser product.	N/A
4.9	Controls	Class 1 laser product.	N/A

IEC 60825-1			
Clause	Requirement + Test	Result – Remark	Verdict
4.10	Viewing optics	Not provided.	N/A
	a) Human access to laser radiation in excess of Class 1M prevented when the shutter is opened or attenuation varied		N/A
	b) Opening of the shutter or variation of the attenuation prevented when exposure to laser radiation in excess of Class 1M is possible		N/A
4.11	Scanning safeguard	Not considered.	N/A
4.12	Walk-in access		N/A
	a) Means provided so that any person inside the housing can prevent activation of a Class 3B or 4 laser hazard	No Walk-in access provided.	N/A
	b) A warning device provides adequate warning of emission to any person within the housing		N/A
	c) Where “walk-in” access during operation is intended or reasonably foreseeable, emission of laser radiation that is equivalent to Class 3B or Class 4 while someone is present inside the enclosure of Class 1, Class 2 or Class 3R product shall be prevented by engineering means		N/A
4.13	Environmental conditions		P
	- climatic conditions		P
	- vibration and shock		P
4.14	Protection against other hazards		P
4.14.1	Non-optical hazards (product safety standard)	Equipment fulfils the requirements according to EN/IEC 60950-1.	P
	- electrical hazards;		P
	- excessive temperature;		P
	- spread of fire from the equipment;		P
	- sound and ultrasonic;		N/A
	- harmful substances;		P
	- explosion;		N/A
4.14.2	Collateral radiation	Collateral radiation not to be expected	N/A

IEC 60825-1			
Clause	Requirement + Test	Result – Remark	Verdict
5	**LABELLING**		**P**
5.1	General	Provided laser labels permanently fixed on protective housing, legible and clearly visible. Laser labels black with yellow background. Positioned so the labels can be read without human exposure to laser radiation in excess of AEL for Class 1. Black letters, symbols, and borders on yellow background used.	P
	LASER PRODUCT CLASS .....:	Class 1 laser product.	—
	Labelling location (Product / User instruction / Package)	On product and instructions.	P
	Warning label – Hazard symbol (Figure 1)		P
	Explanatory label (Figure 2)		P
5.2-5.6	Text on explanatory label .....:	CLASS 1 LASER PRODUCT	P
5.7	Aperture label		N/A
5.8	Radiation output and standards information	For Class 1.	P
	Max output of laser radiation .....:	--	—
	Pulse duration .....:	--	—
	Emitted wavelength(s) .....:	--	—
	The name and publication date of the standard....:	In instructions.	P
5.9	Labels for access panels		P
5.9.1 a) – f)	Warning wording used .....:	Class 1 laser product. 3B was taking into account the maximum value in the specification of manufacturer and the following label was affixed to each Laser Scan Unit anyway. (see copy of marking plate)	P
5.9.2	Labels for safety interlocked panels		N/A
	Warning wording used .....:	Class 1 laser product.	N/A
5.10	Warning for invisible laser radiation .....:	(see 5.9.1)	P
5.11	Warning for visible laser radiation .....:	Class 1 laser product.	N/A

IEC 60825-1			
Clause	Requirement + Test	Result – Remark	Verdict
6	**OTHER INFORMATIONAL REQUIREMENTS**		**P**
6.1	Information for the user	Provided in the operating instructions of this product.	P
	a) adequate instructions for proper assembly, maintenance and safe use and description of the classification limitations, if appropriate	Adequate instructions for proper assembly, maintenance, and safe use provided	P
	b) warning for Class 1M and 2M	Class 1	N/A
	c) laser beam parameters for radiation above the AEL of Class 1	No laser apertures to be indicated.	N/A
	• Wavelength .....:	--	N/A
	• Beam divergence .....:	--	N/A
	• Pulse duration .....:	--	N/A
	• Maximum power or energy output .....:	--	N/A
	d) embedded laser products and other incorporated laser products	Specified in instruction.	P
	e) MPE and NOHD for Class 3B and Class 4 laser products For collimated beam Class 1M and 2M lasers the extended NOHD (ENOHD)	Class 1 laser product.	N/A
	f) information for the selection of eye protection		N/A
	g) reproduction of labels		P
	h) location of laser apertures	No laser apertures to be indicated.	N/A
	i) listing of controls, adjustment of procedures and warning statement	Not provided.	N/A
	j) information about laser energy source if not incorporated in the manual	Incorporated.	N/A
6.2	Purchasing and service information		P
	a) safety classification of each laser product stated in descriptive material	Provided in service manual.	P
	b) adequate instructions for servicing available	Provided in service manual.	P

IEC 60825-1			
Clause	Requirement + Test	Result – Remark	Verdict
7	**ADDITIONAL REQUIREMENTS FOR SPECIFIC LASER PRODUCTS**		**P**
7.1	Applicable other parts of the standard series IEC/EN 60825		P
	IEC 60825-2 (Safety of optical communication systems)		N/A
	IEC 60825-4 (Laser guards)		N/A
	IEC 60825-12 (Safety of free space optical communication systems used for transmission of information)		N/A
	Further information may be found in:		N/A
	IEC/TR 60825-3 (Guidance for laser displays and shows)		—
	IEC/TR 60825-5 (Manufacturer's checklist for IEC 60825-1)		—
	IEC/TR 60825-8 (Guidelines for the safe use of laser beams on humans)		—
	IEC/TR 60825-9 (Compilation of maximum permissible exposure to incoherent optical radiation)		—
	IEC/TR 60825-10 (Application guidelines and explanatory notes to IEC 60825-1)		—
	IEC/TR 60825-13 (Measurements for classification of laser products)		—
	IEC/TR 60825-14 (A user's guide)		—
	IEC 62471 (CIE S 009) (Photobiological safety of lamps and lamp system)		—
7.2	Medical laser products		N/A
	Class 3B and Class 4 medical laser products comply with IEC 60601-2-22		N/A
7.3	Laser processing machines		N/A
	Comply with IEC/ISO 11553-1		N/A
7.4	Electric toys	Not such products.	N/A
	Comply with IEC 62115		N/A
7.5	Consumer electronic products	Compliance will be checked in end product.	N/A
	Complying with IEC 60950 or IEC 60065		N/A

IEC 60825-1			
Clause	Requirement + Test	Result – Remark	Verdict
8	**CLASSIFICATION**		**P**
8.2	Classification responsibilities	Compliance will be checked in end product.	N/A
8.3	Classification rules		P
8.3a	Radiation of a single wavelength		P
8.3b	Radiation of multiple wavelengths	No such radiation.	N/A
	1) Laser product emission two or more wavelengths in spectral regions shown as additive in Table 2 ..:	--	N/A
	2) Laser product emission two or more wavelengths in spectral regions not shown as additive in Table 2 .....:	--	N/A
8.3c	Radiation from extended sources.....:	No such sources radiating from each Laser Scan Unit considered.	N/A
	Value of angular subtense α (mrad) .....:	--	N/A
8.3d	Non-uniform retinal image radiance profile, non-circular and multiple sources	No such sources considered.	N/A
8.3e	Time basis		P
	1) 0.25s		N/A
	2) 100s		P
	3) 30000s		N/A
8.3f	Repetitively pulsed or modulated lasers	The laser unit output is a pulsed laser due to scanning by polygon motor. However the stricter limits of a continuous laser are being applied.	N/A
	1) Exposure from any single pulse not exceeding the AEL for a single pulse		N/A
	2) Average power for a pulse train		N/A
	3a) Constant pulse energy and pulse duration		N/A
	3b) Varying pulse widths or varying pulse durations		N/A

IEC 60825-1			
Clause	Requirement + Test	Result – Remark	Verdict
9	**DETERMINATION OF ACCESSIBLE EMISSION LEVELS**		**P**
9.1	Tests	Class 1 laser product.	P
	Single fault eliminated		P
	Housing material withstanding degradation		N/A
	Fault detection		N/A
9.2	Measurement conditions .....:	See 9.3.2.	P
	Measured laser radiation .....:	See table "Measured laser radiation, calculations and comparison with AEL limits"	P
9.3	Measurement geometry		P
9.3.1	General, evaluation scheme		—
	a) Simplified (default) method		P
	b) Increased AEL by parameter C_6		N/A
9.3.2	Default (simplified) evaluation		P
	Condition applied .....:	3	P
	Aperture stop diameter (mm) .....:	7	P
	Measurement distance (mm) .....:	At the closest point on the outside of the aperture of Laser Scan Units and of end product.	P
9.3.3	Extended sources	No such sources considered.	N/A
	C_6 .....:	--	N/A
9.3.3a	Aperture diameters		N/A
	Condition applied .....:	--	N/A
	Aperture stop diameter (mm). .....:	--	N/A
	Angular subtense of the apparent source α .....:	--	N/A
9.3.3b	Angle of acceptance		N/A
	Condition applied .....:	--	N/A
	1) Photochemical retinal limits.....:	--	N/A
	Angel of acceptance .....:	--	N/A
	2) All other retinal limits.....:	--	N/A
	Angel of acceptance .....:	--	N/A

IEC 60825-1			
Clause	Requirement + Test	Result – Remark	Verdict

Measured laser radiation, calculations and comparison with AEL limits:

1. Classification, Laser Class:
- 1 for end product
- 3B for laser diode from the specification

2. Calculation of AEL

Angular subtense: α = 0 mrad assumed

Used correction factors:
- $C_4 = 10^{0.002(\lambda-700)} = 10^{0.002(788-700)} = 1.4997$
- $C_7 = 1$

Accessible emission limit (AEL)
- Class 1: $3.9 \times 10^{-4}\ C_4\ C_7$ [W] = 0.585mW
- Class 3B: 0.5 W

3. Measurement results of Laser Scan Units

3.1 Normal condition: 21.6µW
3.2 Fault conditions (Polygon Motor locked): 588µW

4. Measurement results of MFP

Fault condition: 0.01µW

IEC 60825-1			
Clause	Requirement + Test	Result – Remark	Verdict

Appendix	EU Group Differences (EN 60825-1:2007)	--
Annex ZA	NORMATIVE REFERENCES TO INTERNATIONAL PUBLICATIONS WITH THEIR CORRESPONDING EUROPEAN PUBLICATIONS The following referenced documents are indispensable for the application of this document. For dated references, only the edition cited applies. For undated references, the latest edition of the referenced document (including any amendments) applies. NOTE When an international publication has been modified by common modifications, indicated by (mod), the relevant EN/HD applies. -- IEC 60050-845: 1987 EN 60601-2-22: 1996 [2] IEC 60601-2-22 [1] EN 61010-1: 2001 [3] + corr. June: 2002 IEC 61010-1 [1]	P
	1) Undated reference. 2) Valid edition at date of issue. EN 60601-2-22:1996 will be superseded by EN 60601-1-2-22: 200X, which is based on IEC 60601-2-22:2007. 3) Valid edition at date of issue.	

IEC 60825-1			
Clause	Requirement + Test	Result – Remark	Verdict

Appended table	**EQUIPMENT MANUFACTURE INFORMATION (DATA SHEET) ABOUT THE CONTAINING LASER COMPONENT/S**		--
	Manufacturer .....:	QSI Co., Ltd.	—
	Type designation .....:	QL78F6SA-K	—
	Structure .....:	AlGaAs	—
	Wavelength .....:	Typ. 788nm	—
	Output power (min. and max.) .....:	Typ. 10mW	—
	Radiation is		—
	Continuous .....:	Continuous.	—
	Pulsed .....:	--	—
	Pulse time .....:	--	—
	Pulse repetition frequency .....:	--	—
	Others .....:	--	—

	PIC UP UNIT		--
	Manufacturer ..... :	--	—
	Type designation ..... :	--	—
	Others ..... :	--	—

	TRANSMITTER/TRANSCIEVER UNIT		--
	Manufacturer .....:	--	—
	Type designation .....:	--	—
	Others .....:	--	—